# 24" DESIGNER OUTDOOR REFRIGERATOR DRAWERS - PANEL READY

ID-24RO

## FEATURES

- Controls temperature within one degree of setpoint
- Assure maximum freshness with low-temp, high-humidity crisper and deli drawers
- Locks in cold air to ensure freshness with magnetic door seals
- Control brightness with soft-on LED lighting
- Open and close doors silently with soft-close technology
- Order accessory panels with or without locks to secure contents
- Choice of stainless-steel panels with pro handles match perfectly with other outdoor Sub-Zero and Wolf products.

## ACCESSORIES

- Dual Installation Kit
- Outdoor Stainless Steel Drawer Panels With Pro Handle
- Outdoor Stainless Steel Drawer Panels with Lock
- Reduced Toekick Divider

Accessories are available through an authorized dealer.
For local dealer information, visit subzero-wolf.com/locator.

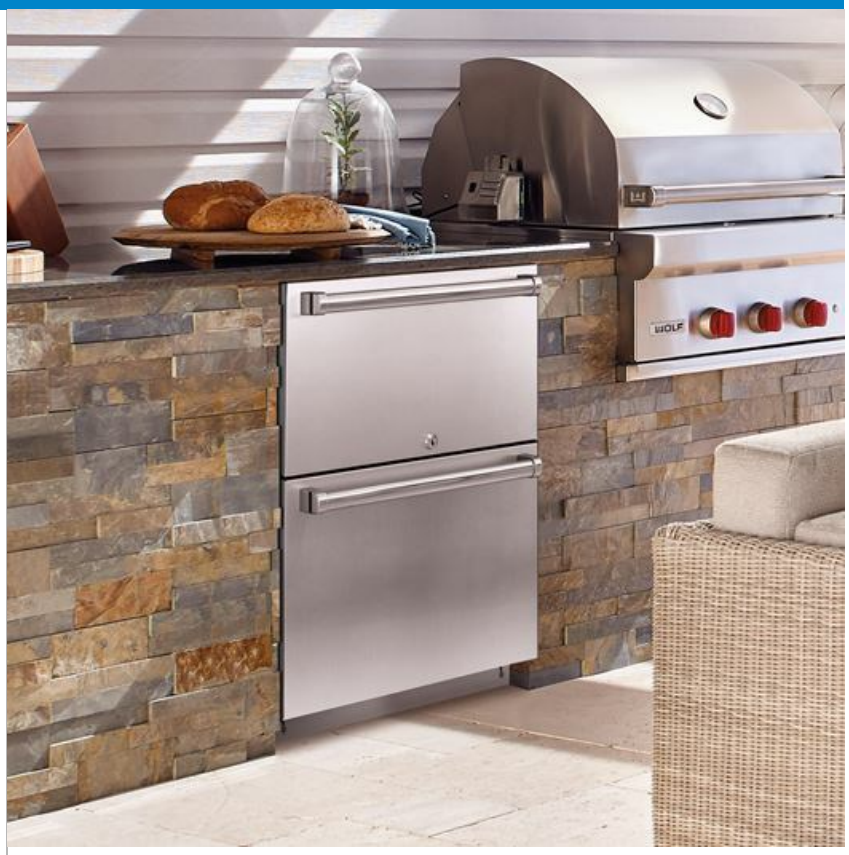


## PRODUCT DETAILS

### REFRIGERATOR

- Adjustable drawer dividers
- LED lighting

Specifications are subject to change without notice. This information was generated on June 11, 2020. Verify specifications prior to finalizing your cabinetry/enclosures.

# 24" DESIGNER OUTDOOR REFRIGERATOR DRAWERS - PANEL READY

## PRODUCT SPECIFICATIONS

| | |
|---|---|
| Model | ID-24RO |
| Dimensions | 24"W x 34 1/2"H x 24"D |
| Drawer Clearance | 18 3/8" |
| Weight | 170 lbs |
| Electrical Supply | 115 VAC, 60 Hz |
| Electrical Service | 15 amp dedicated circuit |
| Receptacle | 3-prong grounding-type, GFCI |

## ELECTRICAL

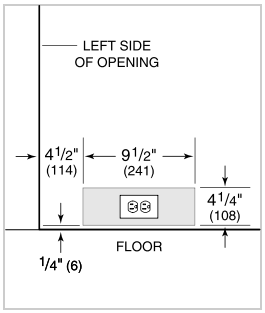


**PANEL SPECIFICATIONS** For complete panels specifications including width/height, weight requirements and thickness requirements visit subzero-wolf.com/reveal.

**NOTE:** Dimensions in parenthesis are in millimeters unless otherwise specified

## INTERIOR VIEW

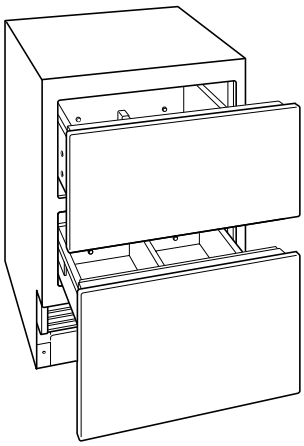

This illustration is intended for interior reference only and may not represent the exterior of the model being specified.

## DIMENSIONS

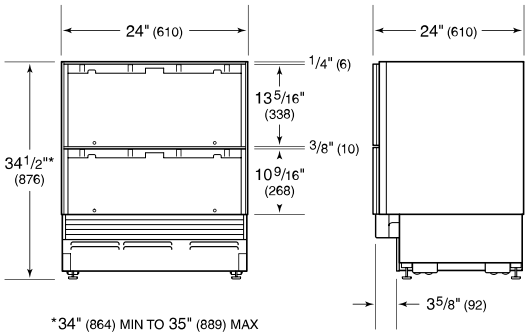


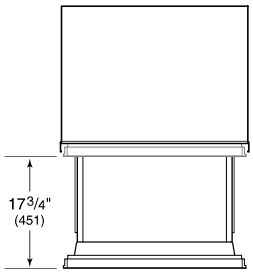


## STANDARD INSTALLATION

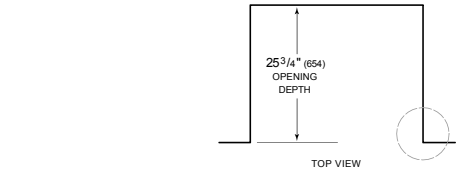


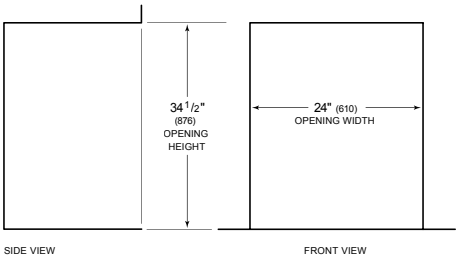

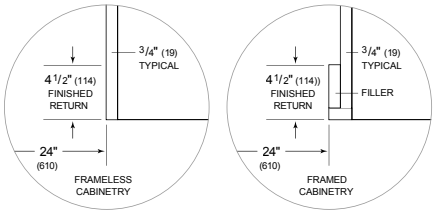
NOTE: 4 1/2" (114) finished returns will be visible and should be finished to match cabinetry