15" ICE MAKER - PANEL READY

UC-15I

FEATURES

Accepts custom panels for an integrated look within cabinetry or stainless-steel accessory panels and handles to match other Sub-Zero, Wolf, and Cove products

Controls temperature within one degree of setpoint

Produces up to 50 pounds of octagonal-shaped ice per day; stores 25 pounds at a time

Locks in cold air to ensure freshness with magnetic door seals

Set the two, four, and eight-hour delay to temporarily stop ice production, or pause ice production at the same time every day with auto-delay

Holds built-in ice scoop neatly in the door so it is there when you need it

ACCESSORIES

15" Stainless Door Panel with Pro Handle

15" Stainless Door Panel with Tubular Handle

15" to 18" Filler

18" Stainless Door Panel with Pro Handle

18" Stainless Door Panel with Tubular Handle

Cleaner For Undercounter Ice Maker

Filter For Undercounter Ice Maker

Sanitizer For Undercounter Ice Maker

Stainless Steel Kickplate

Stainless Steel Pro Handles

Stainless Steel Tubular Handles

Accessories are available through an authorized dealer.
For local dealer information, visit subzero-wolf.com/locator.

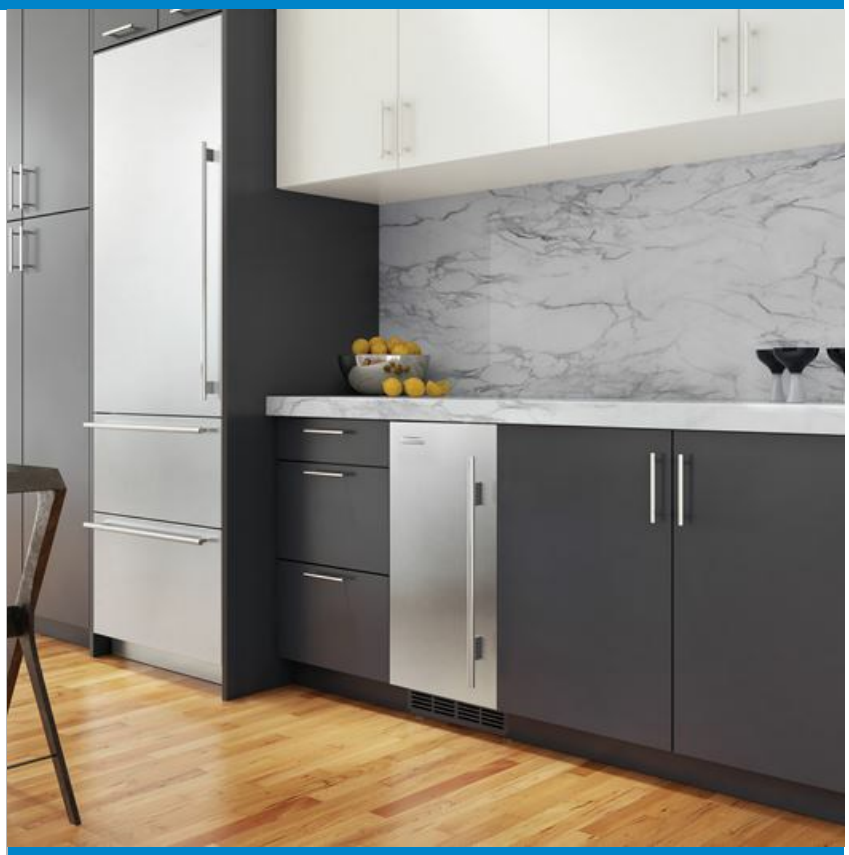

HANDLE ACCESSORIES

PRO

TUBULAR

PRODUCT DETAILS

FREEZER

- Halogen lighting
- Built-in ice scoop

Specifications are subject to change without notice. This information was generated on June 11, 2020. Verify specifications prior to finalizing your cabinetry/enclosures.

PRODUCT SPECIFICATIONS

Model	UC-15I
Dimensions	14 3/4"W x 33 5/8"H x 23"D
Door Clearance	18"
Weight	117 lbs
Electrical Supply	115 VAC, 60 Hz
Electrical Service	15 amp dedicated circuit
Plumbing Supply	1/4" OD copper, braided stainless steel or PEX tubing
Plumbing Pressure	20–80 psi

ELECTRICAL

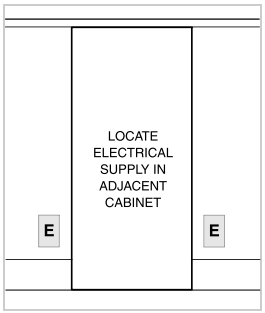

PLUMBING

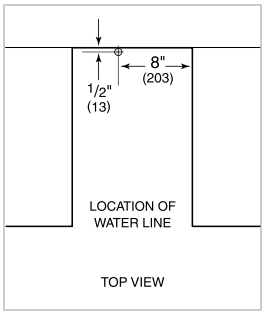

ICE MAKER DRAIN Ice maker models can be ordered with or without a drain pump. Models without a pump will drain water by gravity. A drain must be provided for all models.

NOTE: Dimensions in parenthesis are in millimeters unless otherwise specified

INTERIOR VIEW

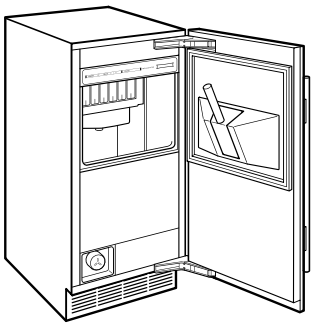

This illustration is intended for interior reference only and may not represent the exterior of the model being specified.

DIMENSIONS

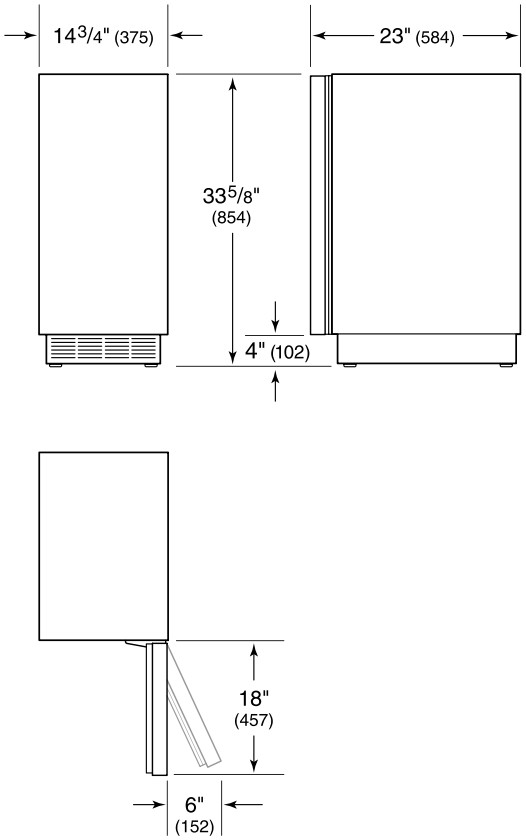

STANDARD INSTALLATION

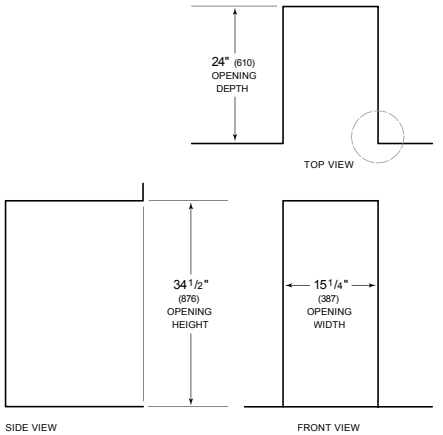
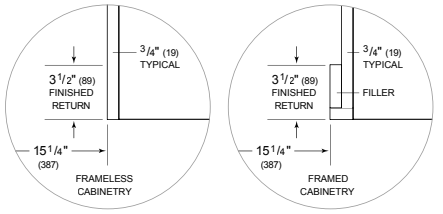
NOTE: 3 1/2" (89) finished returns will be visible and should be finished to match cabin