30" TRANSITIONAL FRAMED INDUCTION COOKTOP

CI304TF/S

FEATURES

Distributes heat more evenly with 40 percent faster temperature response than gas or electric

Transfers heat more efficiently because the energy is supplied directly to the cookware

Enjoy cooking with lightning-fast highs and subtle lows

Pair our slim 15" width with other Wolf modules for an integrated design

Accommodates different pan sizes due to three elements and an additional bridging option

Promote safer and easier cooking with cookware sensing guards

Cleanup is a snap with the black ceramic glass surface

Enjoy the illuminated touch controls and convenient lock feature

ACCESSORIES

Cooktop/Module Filler Strip

Cooktop/Module Filler Strip for Downdrafts

Accessories available through an authorized dealer.
For local dealer information, visit subzero-wolf.com/locator.

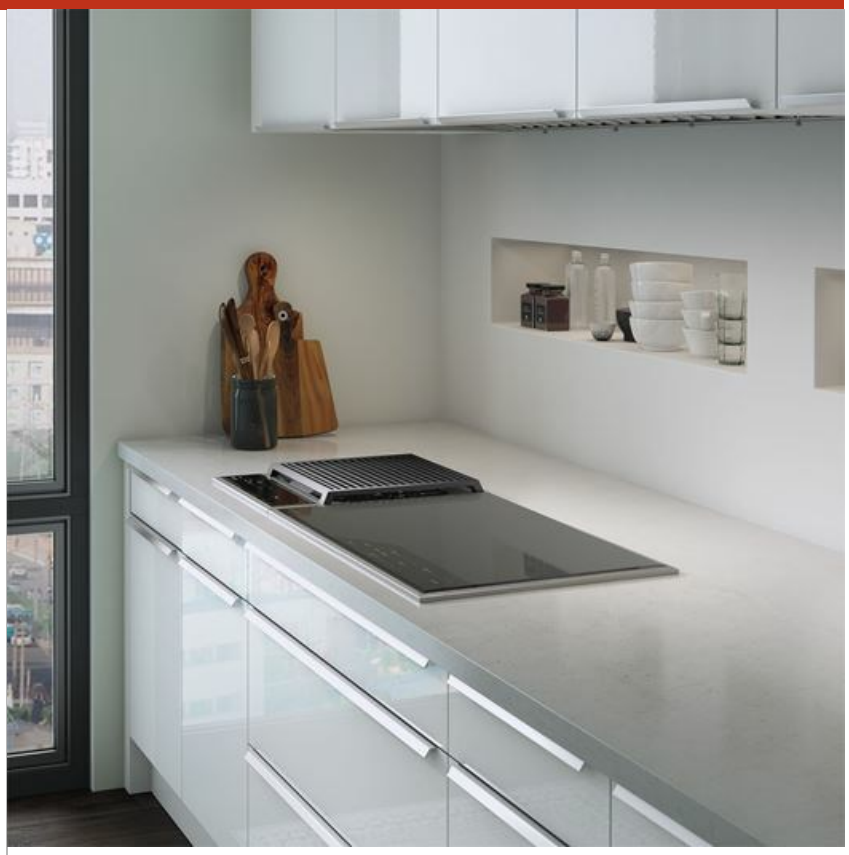

COOKTOP SPECIFICATIONS

- Brushed stainless trim
- Black glass ceramic surface
- True simmer and melt settings
- Boost mode for high heat
- 1 - 1,400 W element
- 1 - 2,100 W element
- 1 - 2,100 W element with 3,000 W boost
- 1 - 2,600 W element with 3,150 W boost

Specifications are subject to change without notice. This information was generated on June 11, 2020. Verify specifications prior to finalizing your cabinetry/enclosures.

30" TRANSITIONAL FRAMED INDUCTION COOKTOP

PRODUCT SPECIFICATIONS

Model	CI304TF/S
Dimensions	30"W x 2"H x 21"D
Electrical Supply	3-wire, 240/208 VAC, 60 Hz
Electrical Service	40 amp dedicated circuit
Conduit Length	4 Feet

ELECTRICAL

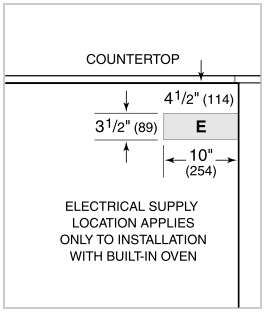

NOTE: Dimensions in parenthesis are in millimeters unless otherwise specified

DIMENSIONS

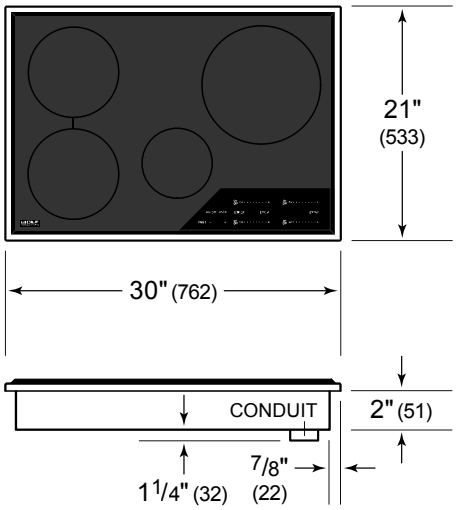

STANDARD INSTALLATION

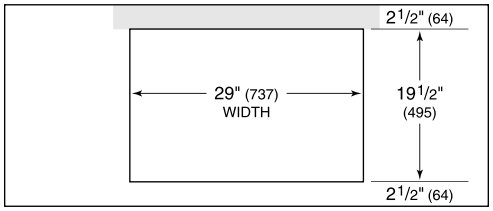

COUNTERTOP CUT-OUT

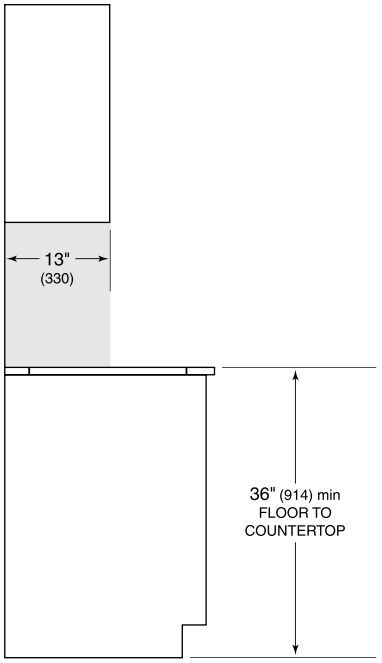

SIDE VIEW

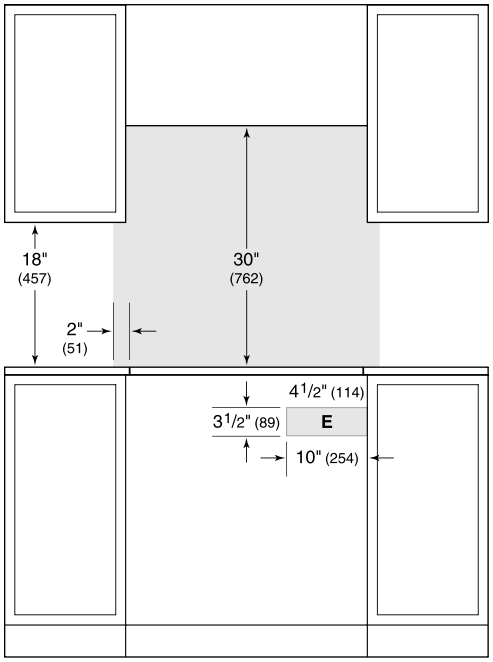

FRONT VIEW

NOTE: Shaded area above countertop indicates minimum clearance to combustible surfaces, combustible materials cannot be located within this area.
Electrical supply location only applies to installations with built-in oven.