Use / Install MANUAL

French Door Bottom Freezer/Refrigerator

3 SERIES

RVFFR336

Please read this manual before using the product!

Dear Customer,

We'd like you to make the best use of our product, which has been manufactured in modern facilities with care and meticulous quality controls.

Thus, we advise you to read the entire user manual before you use the product. In case the product changes hands, do not forget to hand the guide to its new owner along with the product.

This guide will help you use the product quickly and safely.

- Please read the user guide carefully before installing and operating the product.
- Always observe the applicable safety instructions.
- Keep the user guide within easy reach for future use.
- Please read any other documents provided with the product.

Keep in mind that this user guide may apply to several product models. The guide clearly indicates any variations of different models.

Important information and useful tips.

Risk of life and property

Risk of electric shock

The product's packaging is made of recycleable materials,
in accordance with the National Environment Legislation

1 Important instructions for safety and environment 3

General safety 3
HCA warning 4
For products with a water dispenser 4
Intended use 4
Children Safety 4
Package information 4

2 Your Refrigerator 5

3 Installation 6

Appropriate installation location 6
Built-in installation 6
Electrical connection 7
Adjusting the feet 7
LED Lighting 7
Door open alarm 7
Before Installation 8
Connecting the water line to the refrigerator 8
Connecting the water line to the water supply 8
Water filter 9
Before using the water/ice dispenser 10
Transportation of the appliance 10
Product Dimensions 11

4 Preparation 13

5 Operating the product 14

Indicator panel 14
Dual cooling system 17
Freezing fresh food 17
Recommendations for preserving frozen food 17
Freezer information 17
Removing door shelves 17
Glass shelves 18
Cold Zone Drawer 18
Humidity Zone Drawer 18
Humidity controlled crisper 18
Ice bin 18
Dairy bin 18
Egg holder 19
Ion Guard 19
Odor filter 19
Using internal water dispenser 19
Dispensing water 19
Using water dispenser 19
Refrigerator Shelf Weight Limitations 20

6 Maintenance and cleaning 21

Avoiding bad odors 21
Protecting the plastic surfaces 21

7 Troubleshooting 22

8 Service Information 24

Warranty 25

1 Important instructions for safety and environment

This section contains safety instructions that will help protect from risk of personal injury or property damage.

Failure to follow these instructions shall void any warranty.

Intended use

– WARNING: Keep ventilation openings, in the appliance enclosure or in the built-in structure, clear of obstruction.
– WARNING: Do not use mechanical devices or other means to accelerate the defrosting process, other than those recommended by the manufacturer.
– WARNING: Do not damage the refrigerant circuit.
NOTE :This warning is only applicable to appliances with refrigerating circuits which are accessible to the user.
– WARNING: Do not use electrical appliances inside the food storage compartments of the appliance, unless they are of the type recommended by the manufacturer.

This appliance is intended to be used in household and similar applications such as
–staff kitchen areas in shops, offices and other working environments;
–farm houses and by clients in hotels, motels and other residential type environments;
–bed and breakfast type environments;
–catering and similar non-retail applications.
–Not to be used in commercial settings.

General safety

- This product can be used by children at and above 8 years old and by persons whose physical, sensory or mental capabilities were not fully developed or who lack experience and knowledge provided that they are supervised or trained on the safe usage of the product and the risks it brings out. Children must not play with the product. Cleaning and maintenance works should not be performed by children unless they are supervised by someone.
- Unplug the product if a failure occurs while it is in use.
- If the product has a failure, it should not be operated unless it is repaired by the Authorized Service Agent. There is the risk of electric shock!
- Connect the product to a grounded outlet protected by a fuse complying with the values in the rating plate. Have the grounding installation made by a qualified electrician. Our company shall not be liable for any damages that will arise when the product is used without grounding in accordance with the local regulations.
- Do not tuck the power cord under the product or to the rear of the product. Do not put heavy items on the power cord. The power cord should not be bent, crushed, and come into contact with any heat source.

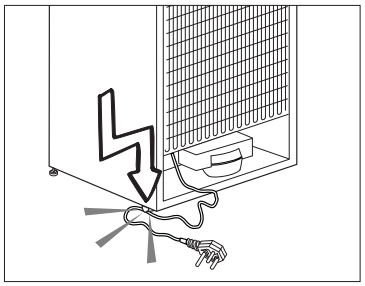

- Never wash the product by spreading or pouring water onto it! There is the risk of electric shock!
- Never touch the plug with wet hands! Never unplug by pulling on the cable, always pull out by grabbing the plug.
- Do not plug the refrigerator if the wall outlet is loose.
- Never connect your refrigerator to electricity-saving systems. Such systems are harmful for the product.
- Unplug the product during installation, maintenance, cleaning and repairing procedures.
- Always have the installation and repairing procedures carried out by the **Authorized Service Agent**. The Manufacturer shall not be held liable for damages that may arise from procedures carried out by unauthorized persons.
- Do not put bottled and canned liquid beverages in the freezer compartment. They may burst!
- Never use steam and steam assisted cleaning materials to clean or defrost the refrigerator. Steam will cause short circuit or electric shock since it would get into contact with the electrical parts in the refrigerator!
- Never use the parts on your refrigerator such as the door and drawer as a means of support or step. This will cause the product to tip over or parts of it get damaged.
- Do not damage the cooling circuit, where the refrigerant is circulating, with drilling or cutting tools. The refrigerant that might blow out when the gas channels of the evaporator, pipe extensions or surface coatings are punctured may cause skin irritations and eye injuries.
- Do not cover or block the ventilation holes on the refrigerator with any material.
- Do not use gaseous sprays near the product since there is the risk of fire or explosion!
- Flammable items or products that contain flammable gases (e.g. spray) as well as the explosive materials should never be kept in the appliance.
- Do not place containers filled with liquid on top of the product. Spilling water on an electrical component may cause electric shocks or risk of fire.
- Do not store products (vaccines, heat-sensitive medicines, scientific materials and etc.) that require a precise temperature control in the refrigerator.

- If you will not operate the product for a long period of time, unplug and unload the food in it.
- If the product is equipped with blue light, do not look at the blue light with optical tools.
- In products with mechanical control (thermostat), wait for minimum 5 minutes to plug in the product again after unplugging it.
- Do not overload the product. It may fall when the door is opened, and cause injury or damage. Similar problems may occur in case of putting things on top of the product.
- Pay attention not to have your hand or any part of your body get caught by the moving parts inside the product.

HCA warning

- Your product's cooling system contains R600a:
  This gas is flammable. Therefore, pay attention to not damaging the cooling system and piping during usage and transportation. In the event of damage, keep your product away from potential fire sources that can cause the product catch a fire and ventilate the room in which the unit is placed.

WARNING: Never dispose the product in fire.

Water dispenser

- Pressure for cold water inlet shall be maximum 90 psi (620kPa). If your water pressure exceeds 80 psi (550 Pa), use a pressure limiting valve in your main system. If you do not know how to check your water pressure, ask for the help of a professional plumber.
- If there is risk of water hammer effect in your installation, always use a water hammer prevention equipment in your installation. Consult Professional plumbers if you are not sure that there is no water hammer effect in your installation.
- Do not install on the hot water inlet. Take precautions against of the risk of freezing of the hoses. Water temperature operating interval shall be 33°F (0.6°C) minimum and 100°F (38°C) maximum.
- Use only potable water.

Intended use

- This product has been designed for domestic use. The warranty excludes use of the product in all commercial locations
- Product must be used only for storing food.
- Viking Range, LLC is not responsible for property damage due to improper installation or water connection.

Children's safety

- Children must be supervised to prevent them from tampering with the product.

DANGER: Risk of child entrapment. Before you throw away your old refrigerator or freezer:
- Take off the doors.
- Leave the shelves in place so that children may not easily climb inside.

Package information

- Packaging materials of the product are manufactured from recyclable materials in accordance with our National Environment Regulations. Do not dispose of the packaging materials together with the domestic or other wastes. Take them to the packaging material collection points designated by the local authorities.
- Contact qualified personnel for disposal.
- Contact qualified personnel for servicing.

2 Your Refrigerator

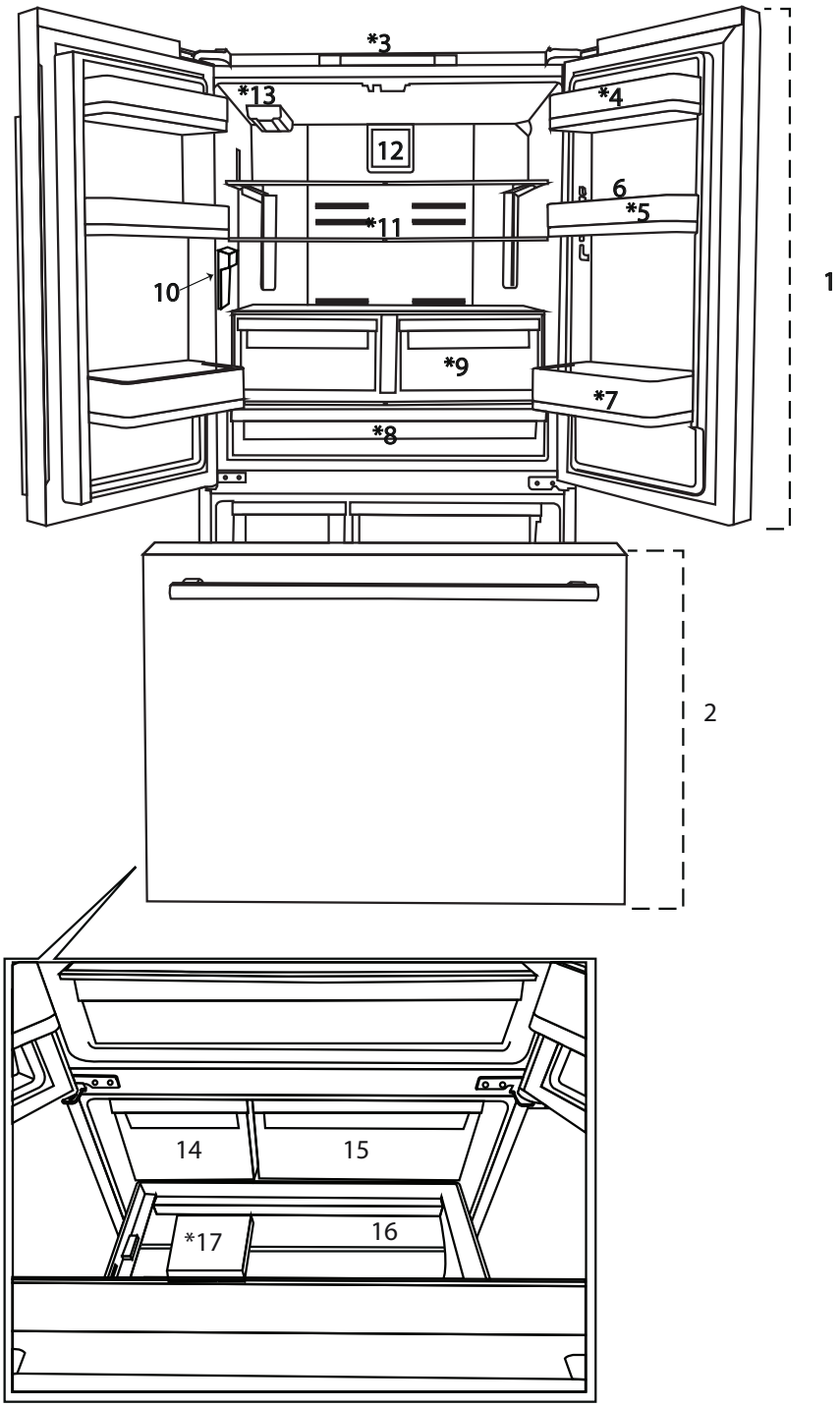

1- Refrigerator Compartment
2- Freezer Compartment
3- Display/indicator Panel
4- Dairy Bin
5- Refrigerator Door Bins
6- Egg Tray
7- Tall Items Door Bin
8- Cold Zone Drawer
9- Humidity Zone Drawers
10- İnner Water Dispenser
11- Adjustable Glass Shelf
12- Fan Cover
13- Water Filter
14- Ice Bin
15- Frozen Food Storage Bın (Upper)
16- Frozen Food Storage Bın (Lower)
17- Drawer Divider

Figures in this user manual are schematic and may not match the product exactly. If the subject parts are not included in the product you have purchased, then those parts are valid for other models.

3 Installation

To reduce the risk of fire, electrical shock, or injury to persons, installation work and electrical wiring must be done by a qualifi ed technician in accordance with all applicable codes and standards, including fire-rated construction.

	It is the customer's responsibility to: • Contact a qualified electrical installer. • Assure that the electrical installation is adequate and in conformance with the National Electrical Code, ANSI/NFPA 70-latest edition or Canadian Electrical Code C22.1-1998 and C22.2 No. 0-M91 (or latest edition), and all local codes and ordinances.
	Product must not be plugged in during installation. Otherwise, there is the risk of death or serious injury!
	WARNING: Installation and electrical connections of the product must be carried out by the Authorised Service Agent. Manufacturer shall not be held liable for damages that may arise from procedures carried out by unauthorized persons.
	WARNING: Prior to installation, visually check if the product has any defects on it. If so, do not have it installed. Damaged products cause risks for your safety.
	Make sure that the power cable is not pinched or crushed while pushing the product into its place after installation or cleaning procedures.

Appropriate installation location

	WARNING: If the door of the room where the product will be placed is too small for the product to pass, then the product's doors must be removed and the product must be turned sideways to pass it through.

- Install the product at least 12" (30 cm) away from heat sources such as gas cooktops, ovens, and stoves and at least 2" (5 cm) away from electrical ovens. Product must not be subjected to direct sun light and kept in humid places after installation.
- Do not place the product on rugs or carpets.
- Place the product on an even floor surface to prevent wobbling.
- Do not install the product in places where the temperature falls below 10°C /50°F.

	If two refrigerators are to be installed side by side, there should be at least 1-1/2" (4 cm) distance between them.

Built-In Installation

If the product will be placed in a cutout, make sure sufficient room is provided around the appliance to ensure free air circulation. To ensure proper ventilation:

-Allow for a 5/8" (1.6 cm) space on each side and 2" (5.1 cm) at the top.

-Allow 1-3/8" (3.5 cm) of space behind the refrigerator.

Proper Circulation

For efficient functioning in the cutout, the metal bracket and air buffer bumpers must be added to product.

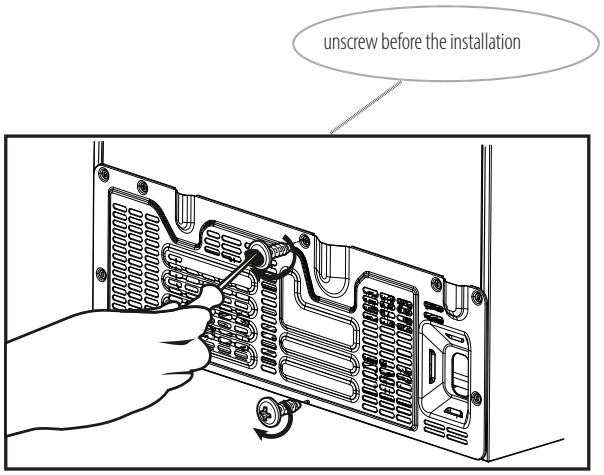

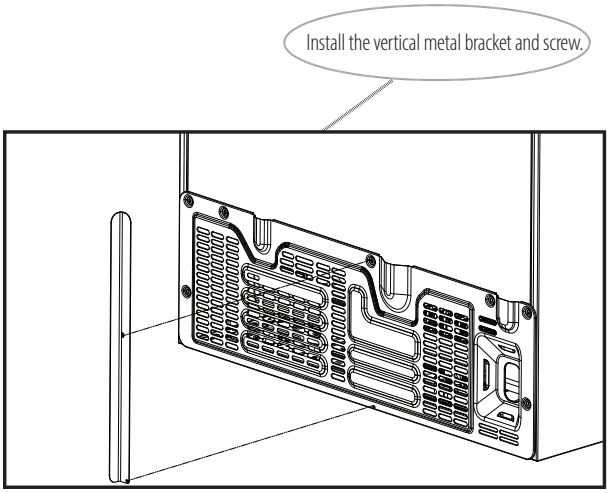

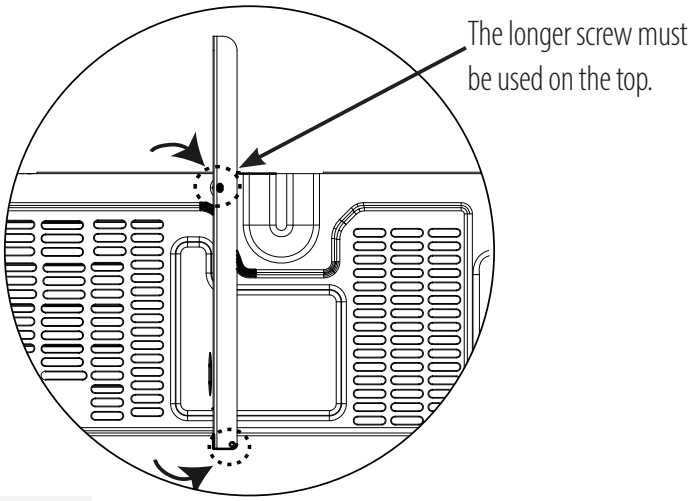

Remove the two screws at the top of the grille. Add the air buffer bumpers using the screws that were removed.

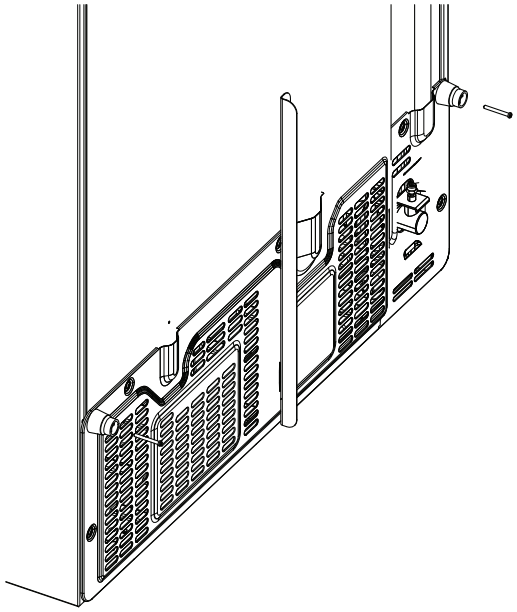

Electrical connection

- Electrical connection must comply with national and local regulations.
- Power cable plug must be within easy reach after installation.
- The specified voltage must be equal to your mains voltage.
- Do not make connections via extension cables or multi-plugs.

WARNING: Damaged power cable must be replaced by the Authorized Service Agents.

WARNING: If the product has a failure, it should not be operated unless it is repaired by the Authorized Service Agent! There is the risk of electric shock!

Adjusting the feet

If the product stands unbalanced after installation adjust the feet. Use another person to safely tilt the product during this process.

WARNING: First unplug the product. Product must not be plugged in when adjusting the feet. There is the risk of electric shock!

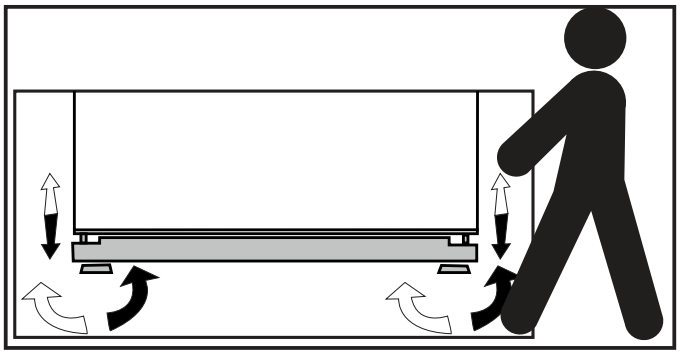

Turn the front feet to balance the product. The corner where the foot exists is lowered when you turn in the direction of arrow and raised when you turn it in the opposite direction.

LED Lighting

Do not attempt to repair yourself. Call an Authorized Service Agent if the LED lights do not go on or are out of order.
The lights used in this appliance are not suitable for household room illumination. The intended purpose of this light is to assist when loading food in the refrigerator/freezer in a safe and comfortable way.

Door Alarm

An audio warning signal will sound when the door of your product is left open for 1 minute. This warning will be muted when the door is closed or any of the display buttons (if any) are pressed.

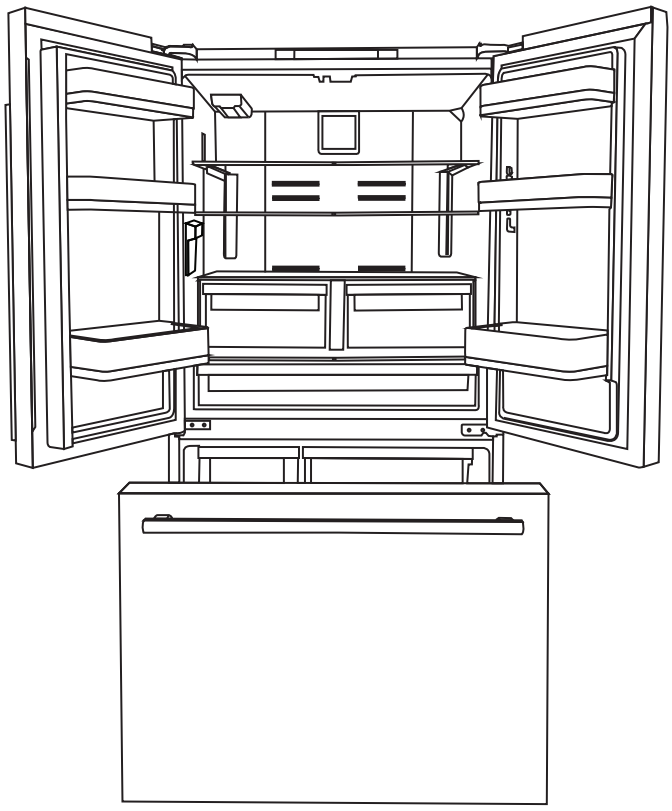

Before Installation

Make sure that you have everything necessary to ensure proper installation before proceeding, including:

Your product comes with an internal water filter for use inside the refrigerator. Part number of the filter is RWFRVFFR and you can use this part number when ordering replacement filters.

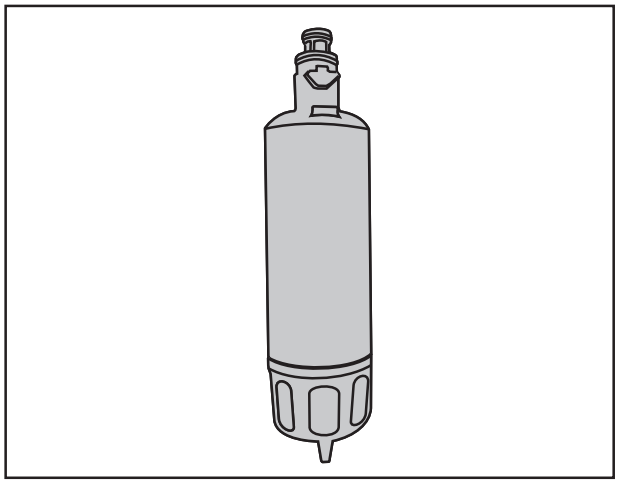

Connecting the water line to the refrigerator

1. Remove the valve channel cover (A) from the water inlet valve.
2. Slip the union (C) water inlet valve (B).
3. Push the water hose downwards firmly to slip it onto the water inlet valve (B).
4. Tighten the union (C) by hand to secure it onto the water inlet valve.

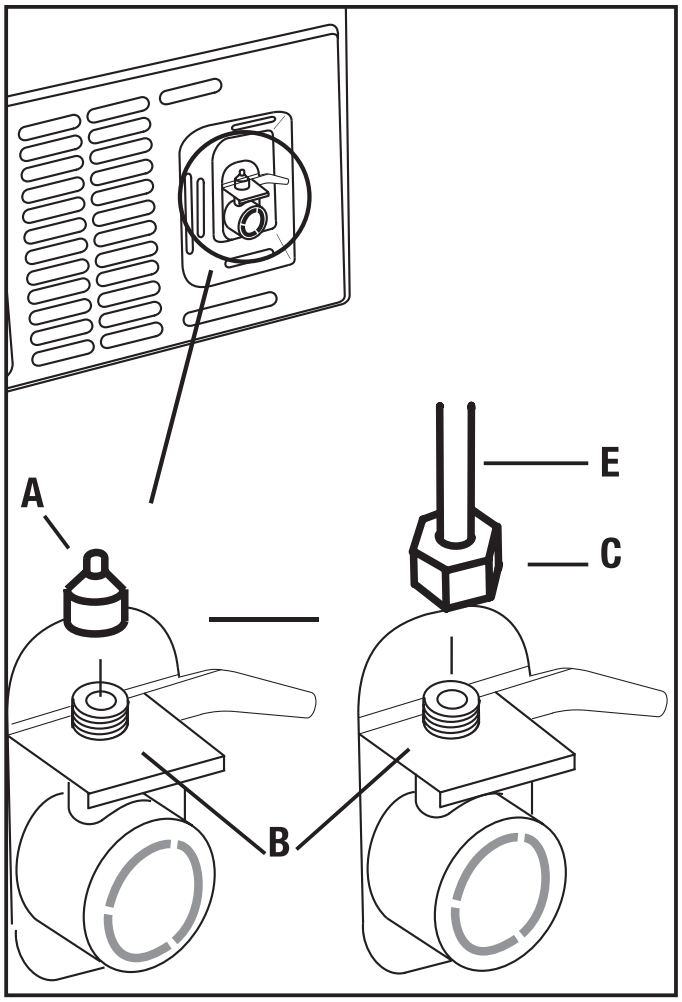

Normally, you are not required to tighten the union with a tool. However, you can use a pliers or pliers to tighten the union if there is a leak. DO NOT overtighten

Connecting the water line to the water supply

Connect the water line to a water supply valve. If a valve is not present or you are not sure, consult a qualified plumber.

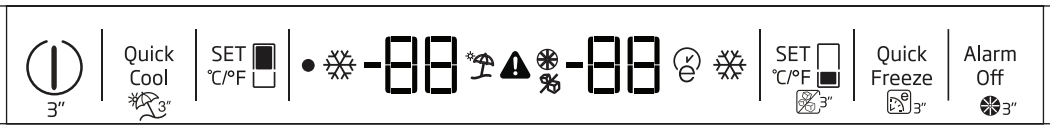

Water filter

Your refrigerator is equipped with an internal filter. To install the water filter, follow the instructions below referring to the figures supplied:

Filter end of life warning.

Installing the water filter

Filter replacement consists of 2 parts - physically changing the filter and making adjustments on the display.

1. Press **"Ice Off"** button (located under the SET button) before removing the by pass cover.
2. Slide the water filter cover forward.
3. Remove the water filter bypass plug by turning it downwards and pulling out.
4. Seat the water filter cover into the mechanism and push forwards to lock it in place.
5. Press **"Ice Off"** button on the display again to exit this mode.

WARNING: Ensure that the Ice Off mode is enabled before removing the by-pass cover.

It is normal that a few drops of water drip after the cover has been removed.

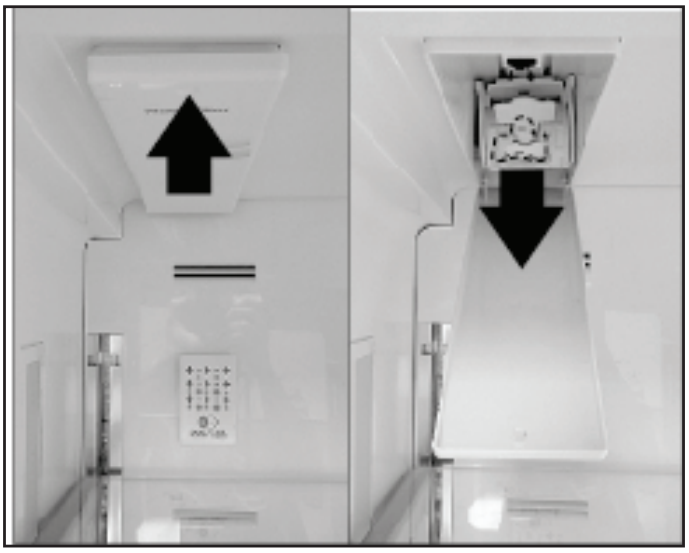

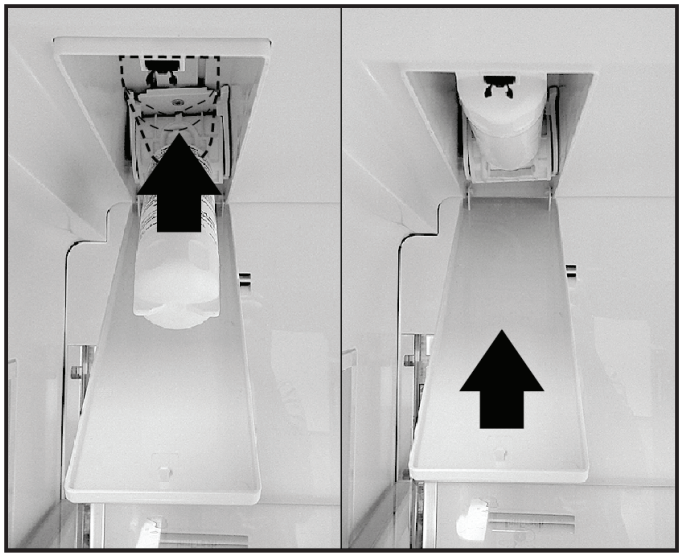

Water filter must be replaced every 6 months. Make sure that the "Ice Off" mode is enabled before removing the filter.

WARNING: Water filter cleans some foreign particles in the water. It does not purify water from microorganisms.

Before using the water/ ice dispenser

- Water system of the refrigerator must be connected To the cold water line. It must not be connected to hot water line.
- No water may be obtained in the initial start-up of the refrigerator. Because there is air in the system. To discharge air from the system, press dispenser for 1-2 minutes until water comes from the dispenser. Water flow may be irregular at the beginning. After the air in the system is discharged, water flow will return to normal place container under dispenser nozzle.
- The first 10 glasses of water should not be consumed.
- During initial use, you will have to wait approximately 12 hours to cool the water.
- It will take around 1-2 days for the system to produce required amount of ice.
- If the water dispenser is not used for a long period of time, first 1-2 glasses of water can be hot.
- If a power outage or a temporary failure occurs while the refrigerator is operating, ice can melt down a little bit and then get frozen again. In such a case, ice cubes can stick to each other. If the outage or failure prolongs, ice can melt down causing water leakage. If you experience such a problem, empty and clean the ice container.
- Ice cubes can stick to each other if they are left in the container for a long time.
- The water system installation of the refrigerator must be performed by the Authorized Service Agent.
- If the product is to be connected to the water mains, make sure that you use potable water.
- Water system of the product is designed to operate only with water. Do not use beverage such as soft drinks and/or juices in the water system.
- It is recommended that the water is disconnected if you will not be using the refrigerator for a long period of time due to vacation or similar reasons.
- Do not attempt to dismantle the ice container group assembly parts.
- Do not attempt to clean the ice container assembly without removing it from the refrigerator.
- When taking water from the water dispenser, remove the glass from the opening 1 second after releasing the trigger. Thus, water in the system will not drip into the drip tray.

Transportation of the product

1. Unplug the product before transporting it.
2. Remove water connections.
3. Secure the shelves, accessories, and drawers. in the refrigerator by adhesive tape before repackaging it.

	Packaging must be tied with thick tapes or strong ropes and the rules of transportation printed on the package must be followed.
	Original packaging and foam materials should be kept for future transportations.
	WARNING: Packaging materials are dangerous for the children. Keep packaging materials in a safe place away from reach of the children.

Product Dimensions

Without Grille

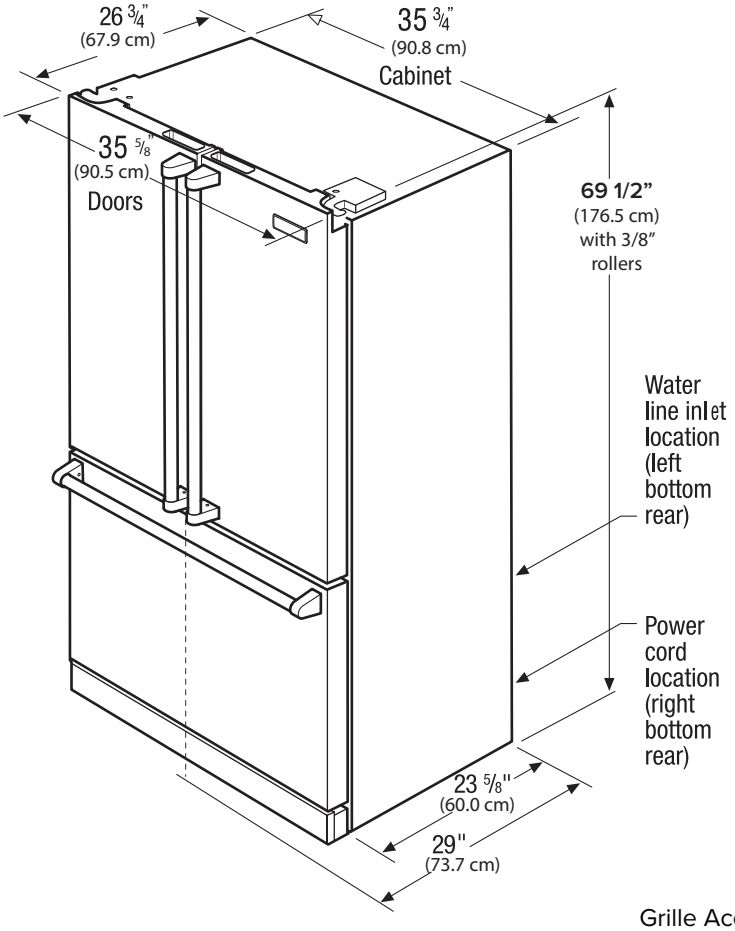

With Grille

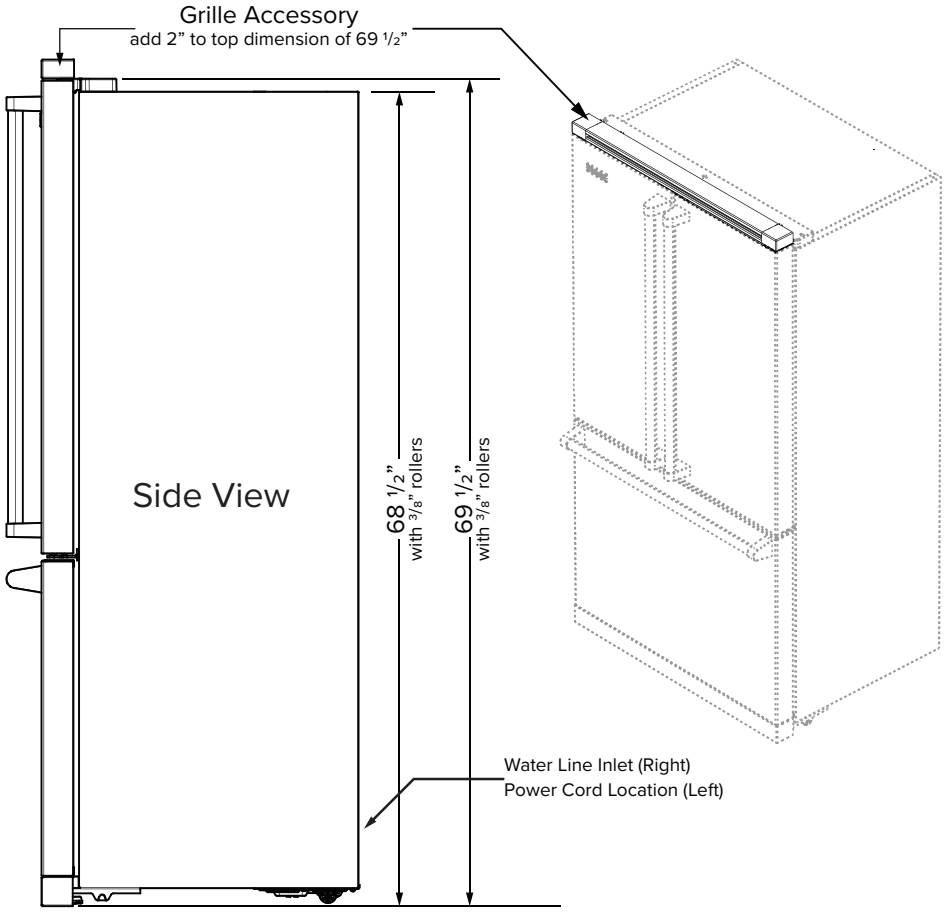

Door Swing

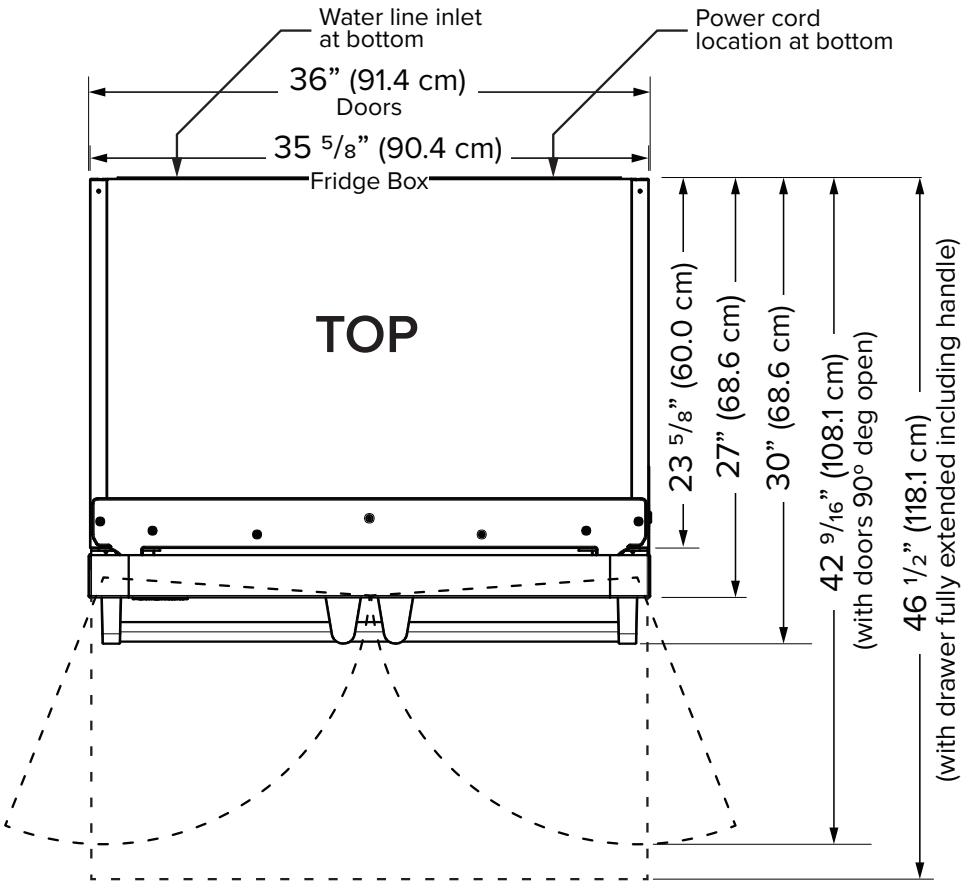
Water line inlet
at bottom
Power cord
location at bottom
36” (91.4 cm)
Doors
35 5/8” (90.4 cm)
Fridge Box
TOP
23 5/8” (60.0 cm)
27” (68.6 cm)
30” (68.6 cm)
42 9/16” (108.1 cm)
(with doors 90° deg open)
46 1/2” (118.1 cm)
(with drawer fully extended including handle)

4 Preparation

Before using the product, check that all preparations are made in accordance with the instructions in sections "Important instructions for safety and environment" and "Installation".

- Clean the interior of the refrigerator as recommended in the "Maintenance and cleaning (Page 25)" section. Check that inside of it is dry before operating it.
- Plug the refrigerator into the grounded wall outlet. When the door is opened the interior illumination will turn on.
- Run the refrigerator without putting any food for 6 hours and do not open its door unless absolutely required.
- Do not allow the food to touch the temperature sensor in refrigerator compartment.

ⓘ	You will hear a noise when the compressor starts up. The liquids and gases sealed within the refrigeration system may also give rise to noise, even if the compressor is not running and this is quite normal.
ⓘ	Front edges of the refrigerator may feel warm. This is normal. These areas are designed to be warm to avoid condensation.

ⓘ	The ambient temperature of the room where you install the refrigerator should at least be 10°C /50°F. Operating your refrigerator under cooler conditions than this is not recommended.
ⓘ	Inside of your refrigerator must be cleaned thoroughly.

- To allow the refrigerator compartment keep its ideal storage temperature, sensor must not be hindered by food.

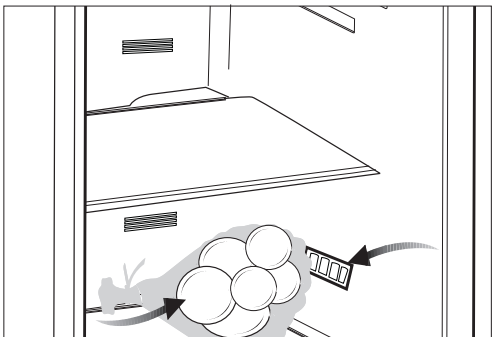

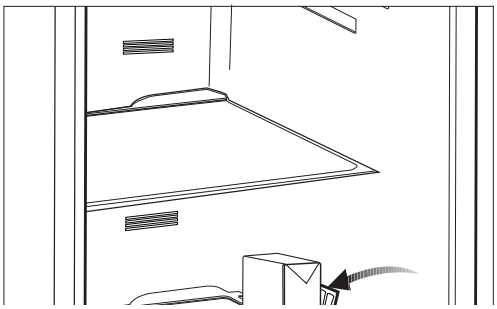

Installing Door Handle

1. Place the handle over the pin joints that are on the door panel.
2. Using the supplied 3 mm allen key, tighten the screw to a tightness where the handle does not move from the pin joints.
3. Tighten both sides evenly and do not overtighten.

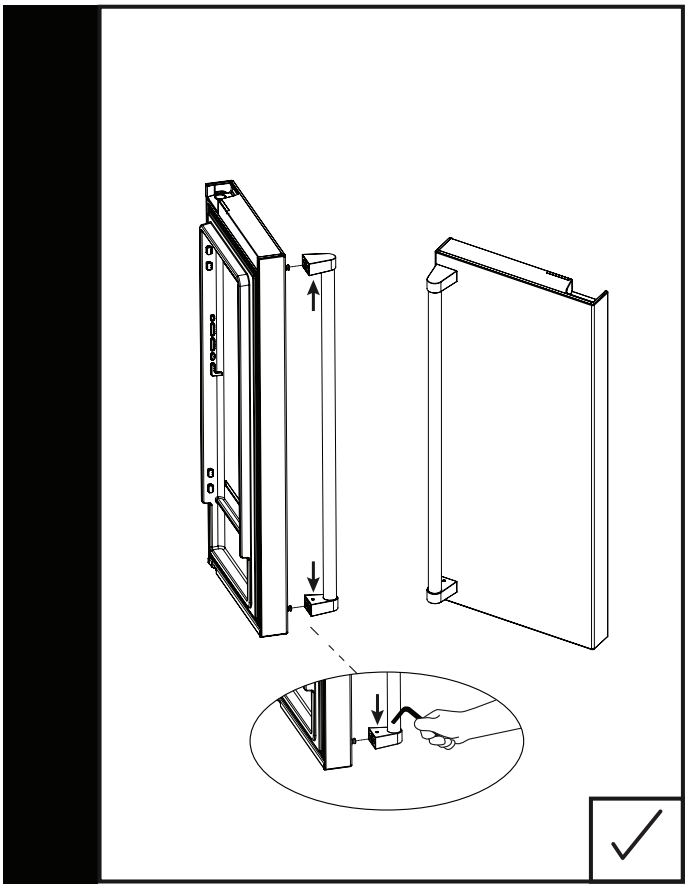

Optional Toe Kick

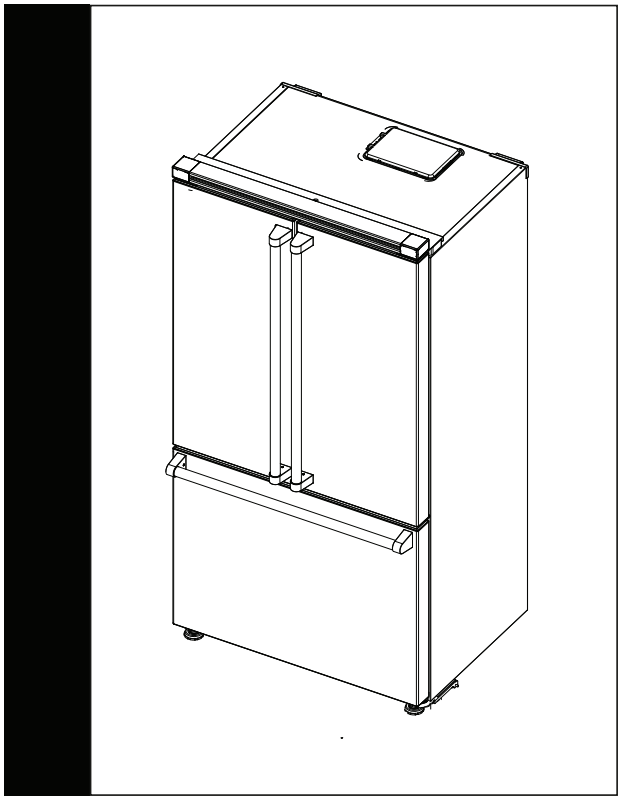

Open the Freezer door

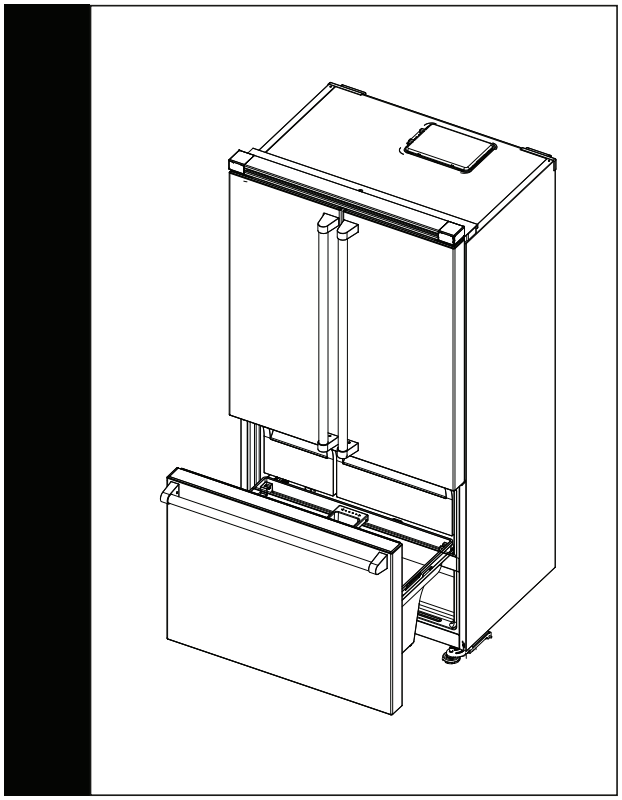

Place the toe kick over the freezer hinge from rear.

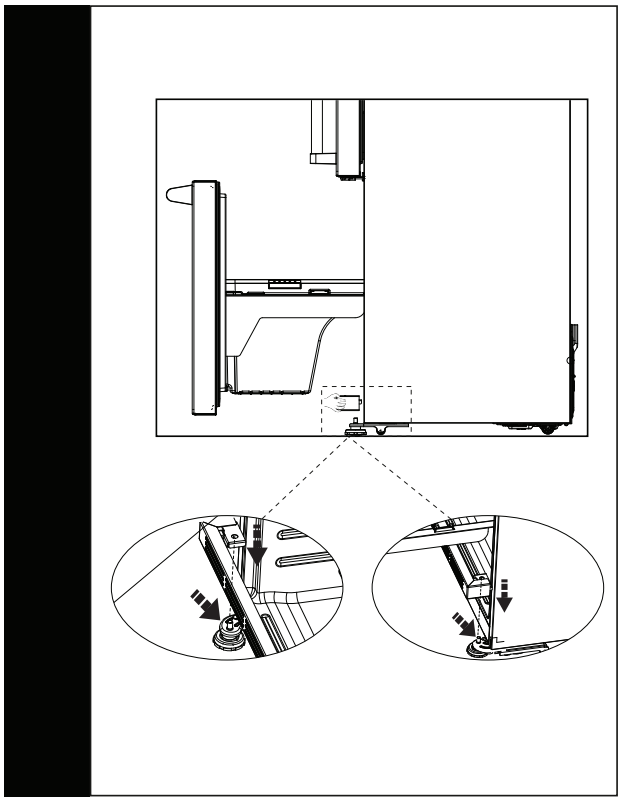

Tighten the nut on the adjustable feet by hand or using a M10 tool.

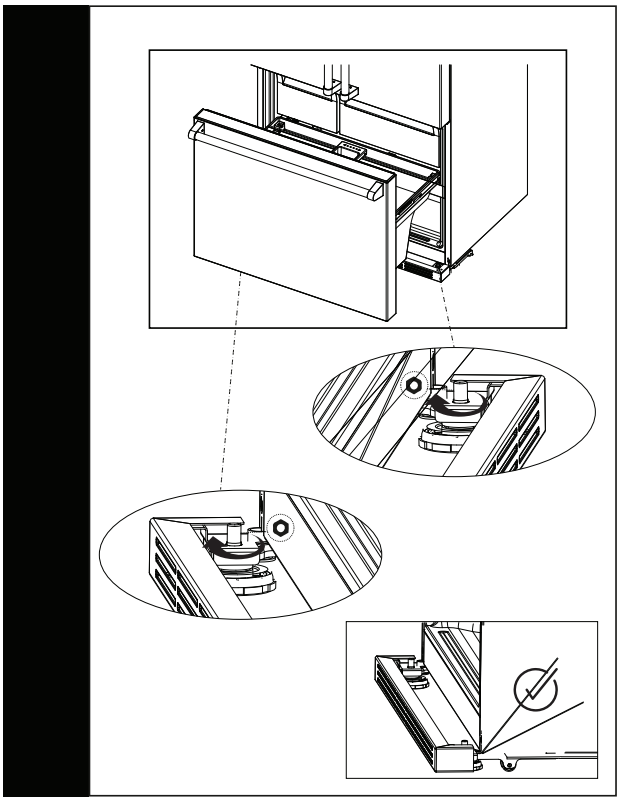

5 Operating the product

Indicator panel

Touch-control indicator panel allows you to set the temperature and control the other functions of the refrigerator. Just press the relevant buttons for function settings.

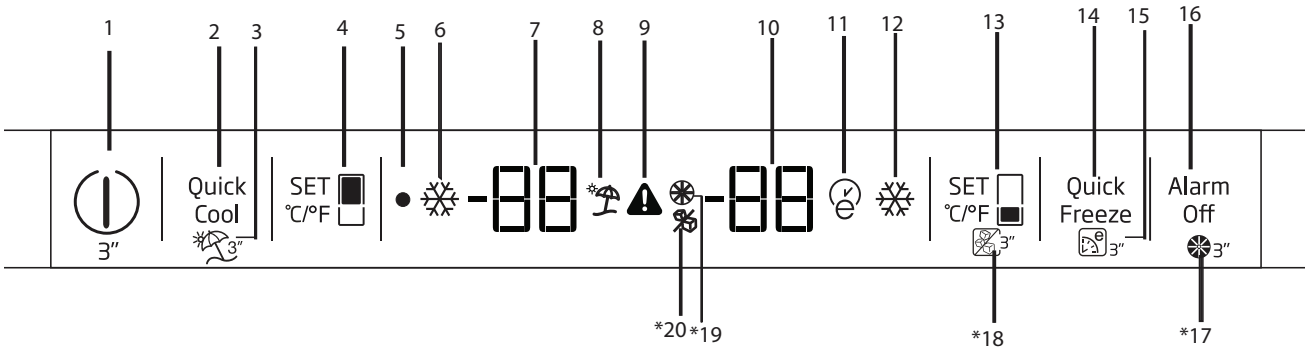

1-On/Off function

Press the On/Off button for 3 seconds to turn off or turn on the refrigerator.

2-Quick Cool Function

When you press Quick Cool button, the temperature of the compartment will be colder than the selected values.
This function can be used for food placed in the cool compartment and required to be cooled down rapidly.
If you want to cool large amounts of fresh food, it is recommended to active this feature before putting the food into the refrigerator. Quick Cool indicator will remain lit when the Quick Cool function is enabled. To cancel this function press Quick Cool button again. Quick Cool indicator will turn off and return to its normal settings.
If you do not cancel it, Quick Cool will cancel itself automatically after 1 hours or when the refrigerator compartment reaches to the cooling system target temperature. This function is not recalled when power restores after a power failure.

3-Vacation Function

Press the Quick Cool\Vacation button for 3 seconds to activate Vacation function."3" icon comes on when the function is active. Function is deactivated by pressing the same button for 3 seconds again or by pressing Refrigerator set button.
When vacation mode is activated, set values for the freshfood compartment will not appear in the display.The temperature will be replaced by two dashes. "..."
When vacation mode is activated, temperature of fresh food is warmer than 50 °F (10 °C) so please do not keep foods in refrigerator compartment. Temperature of freezer is not affected.

4-Refrigerator Set Function

This button allows you to adjust the refrigerator compartment temperature setting. Press this button to set the temperature of the refrigerator compartment to 46-39 °F (8,-2 °C).

5-Off Indicator

Off Indicator illuminated when the refrigerator is off .

6-Quick Cool Indicator

This icon is illuminated when the Quick Cool function is active.

7-Refrigerature Compartment Temperature Setting Indicator

Indicates the temperature set for the refrigerator compartment.

8-Vacation Indicator

This icon is illuminated when the Vacation function is active.

9-High Temperature Warning Indicator

The High Temp Error icon is displayed when the Freezer temperature is too warm after the initial 72 hours of operation. If the Freezer temperature reaches 28°F (-2.2°C) or higher, and doesn't drop below 16°F (-9°C) within 12 hours, the High Temp Error icon will be illuminated, an alarm will sound and the set temperature and highest temperature reached in the Freezer will alternate in the display. If you press the "Alarm Of" key, the alarm will be silenced, but the icon and flashing temperature will continue until the Freezer gets below 16°F (-9°C). If the Freezer does not cool below 16°F (-9°C) in the next 3.5 hours,

***optional:** Figures in this user manual are schematic and may not match the product exactly. If the subject parts are not included in the product you have purchased, then those parts are valid for other models.

the audible alarm will return. The audible alarm can be silenced again with the "Alarm Off" key. If the error continues to return, the doors should be checked for proper closure and sealing. A common cause of this error is a power failure in the circuit to which the refrigerator is connected. If the icon continues to return, an authorized service agent should be called to inspect the unit.

10-Freezer Compartment

Temperature Setting Indicator Indicates the temperature set for the Freezer Compartment.

11-Eco-Extra Indicator

Eco-Extra Indicator is illuminated when the Eco Extra function is active.

12-Quick Freeze Indicator

This indicator is illuminated when the Quick Freezer function is active.

13-Freezer Set Function

This function allows you to make the freezer compartment temperature setting. Press this button to set the temperature of the freezer compartment to -8 to 5°F (-22 to -15°C).

14-Quick Freeze Function

The Quick Freeze indicator will be illuminated when this feature is on. Press the Quick Freeze button to turn this option on.When Quick Freeze is activated it will drop the Freezer temperature to its lowest setting for 24 hours, after which time it will automatically cancel and return to the set temperature.

15-Eco-Extra (Special Economic Usage) Function

Press the Quick Freeze\Eco Extra button for 3 seconds to activate the Eco Extra Function. Refrigerator will start operating in the most economic mode at least 6 hours later and the economic usage indicator will turn on when the function is active. Press the Quick Freeze button for 3 seconds again to deactivate the Eco Extra Function.

16-Alarm Off

When the refrigerator door is opened for 1 minute or when there is a sensor failure, an alarm will sound. Alarm can be turned off by pressing "Alarm Off" button. If you close the door and then open again "Door open alarm" will be activated again after 1 minute later .

17-Filter reset button

The filter is reset when the alarm off button is pressed for 3 seconds. Filter reset icon goes off.

18-Ice machine off button

Ice machine is activated and deactivated when freezer set button is pressed for 3 seconds. A no ice icon will be displayed when the ice maker is off.

19. Filter reset icon

This icon turns on when the filter needs to be reset.

20-Ice machine off icon

The ice machine off icon will illuminate when the ice machine is deactivated. This icon will not be illuminated when the ice machine is active.

Sabbath Mode:

Press the Refrigerator Set Function Button for 3 seconds to activate or deactivate the Sabbath Mode. When Sabbath Mode is activated, the display, alarm, door opening or light buttons will not function: The cooling algorithm is set according to the sabbath fashion. If the user does not deactivate the Sabbath mode, the refrigerator will automatically cancel it in 72 hours.

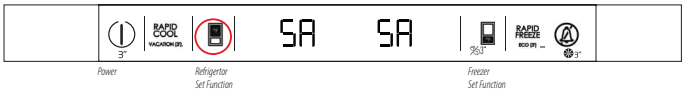

Showroom Mode:

Showroom Mode is an option primarily used in dealer's showrooms. It allows the product to be turned on without the operation of the fans and cooling system. To activate this mode, Press and hold Power & Alarm Off button until PS 0 appears. Change the 0 to an 8 by pressing the Freezer Set Function button. Then press Refrigerator Set Function button to activate. To deactivate, press and hold the Power & Alarm Off button again.

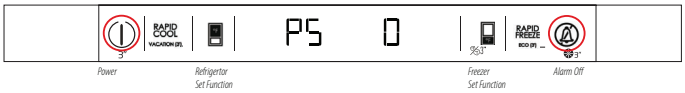

Freezer Compartment Setting	Refrigerator Compartment Setting	Explanations
-15°C / 5°F	4°C / 39°F	This is the normally recommended setting.
-20°C / -4°F	3°C / 37°F	These settings are recommended when the ambient temperature exceeds 30°C/86°F.
Quick Freeze	4°C / 39°F	Use when you wish to freeze your food in a short time. Your refrigerator will return to its previous mode when the process is over.
-24°C / -12°F	2°C / 35°F	Use these settings if you think that your refrigerator compartment is not cold enough because of the hot ambient conditions or frequent opening and closing of the door.
-15°C /5°F or colder	Quick Refrigerator	Use this function when you place large quantities into the refrigerator compartment or when you need to cool your food quickly. It is recommended that you activate Quick Refrigerator function 4-8 hours before placing the food in the compartment.

Dual cooling system

Your refrigerator is equipped with two separate cooling systems to cool the refrigerator compartment and freezer compartment. Thus, air and odor in the refrigerator compartment and frozen food compartment do not get mixed. Thanks to these two separate cooling systems, cooling speed is much faster then other refrigerators. Also additional power saving is provided since the defrosting is performed individually.

Freezing fresh food

- Wrap the food or place them in a covered container before putting them in the refrigerator.
- Hot food and beverages must cool down to the room temperature before putting them in the refrigerator.
- The food that you want to freeze must be fresh and in good quality.
- Divide the food into portions according to your family's daily or meal based consumption needs.
- Pack the food in an airtight manner to prevent them from drying even if they are going to be stored for a short time. Use packaging materials that are tear-proof and resistant to cold, humidity, oils and acids and airtight. All packaging must be completely sealed.
- Frozen food must be used immediately after they are thawed and they should never be re-frozen.
- Do not freeze excessively large quantities of food at one time. The quality of the food is best preserved when it is frozen right through to the core as quickly as possible.
- Placing warm food into the freezer compartment causes the cooling system to operate continuously until the food is frozen solid.

Recommendations for preserving frozen food

- Frozen food that you have purchased should be stored in accordance with the frozen food manufacturer's instructions for a (4 star) frozen food storage compartment.

Note:To ensure the quality achieved by the frozen food manufacturer and food retailler is maintained, follow the steps listed below:

1. Put packets in the freezer as quickly as possible after purchase.
2. Make sure that contents of the package are labelled and dated.
3. Check whether the "Use By" and "Best Before" dates on the packaging are exceed or not.

Placing the food

Freezer compartment shelves	Various frozen food such as meat, fish, ice cream, vegetables and etc.
Refr igerator compartment shelves	Food in pans, covered plates and closed containers
Refrigerator compartment door shelves	Small and packaged food or beverage (such as milk, fruit juice, beer and etc.)
Forever fresh	Vegetables and fruits
Cold Zone	Delicatessen products (cheese, butter, salami and etc.)

Freezer information

You can keep the freshness of food for many months (at -15°C / 5°F or lower temperatures in the freezer).

i	Divide the food into portions according to your family's daily or meal based consumption needs.
i	Pack the food in an airtight manner to prevent them from drying even if they are going to be stored for a short time.

- Materials necessary for packaging:
- Cold resistant adhesive tape
- Self adhesive label
- Rubber bands
- Pen

Removing door shelves

You can remove the door shelves to clean them. Do not remove the door shelf when there is food on it. Remove all food first To remove the upper door bins, push down on the gray tabs to disengage the bin and remove. The bottom door bin can be removed by pushing the desired shelf up.

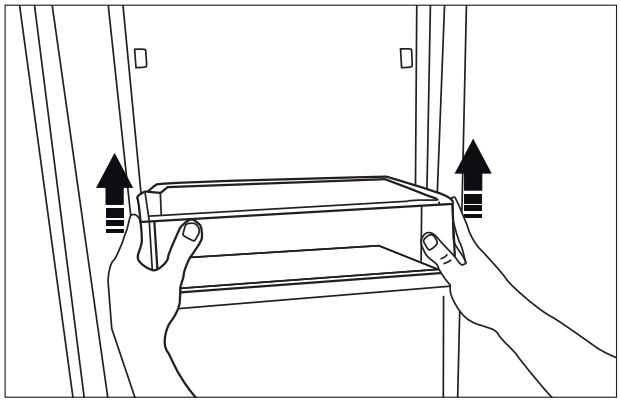

Glass shelves

You can remove the glass shelves to clean them. Be careful when removing the shelves since they are heavy.

Cold Zone Drawer

The Cold Zone drawer allows you to prepare the food for freezing. You can also use this drawer to store your food at a temperature a few degrees below the refrigerator compartment. You can increase the inner volume of your refrigerator by removing any of the chiller compartments:

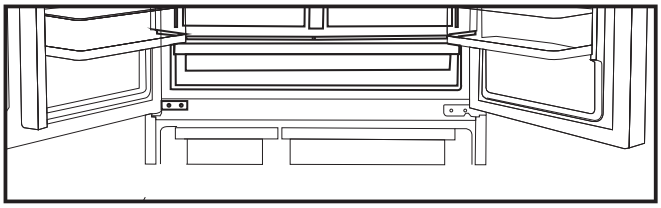

1. Pull the compartment towards yourself until it stops.
2. Lift the compartment about 1 cm up and pull towards yourself to remove it from its seating.

Humidity Zone Drawer

The Humidity Zone drawer is designed specially to keep the vegetables fresh without loosing their humidity. For this purpose, cool air circulation is intensified around the drawers in general. Remove the door shelves that stand against the drawers before removing.

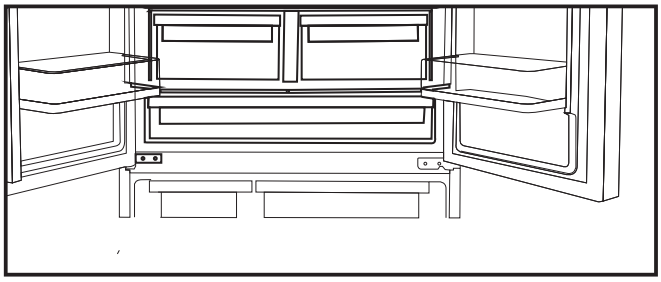

Humidity levels of the vegetables and fruit are controlled using the Humidity Zone drawers, and food stays fresher longer.

We recommend you store the leafy vegetables such as lettuce, spinach and the vegetables which are sensitive to humidity loss, in a horizontal manner as much as possible inside the crisper, not on their roots in a vertical position.

While the vegetables are being placed, specific gravity of the vegetables should be taken into consideration. Heavy and hard vegetables should be put at the bottom of the crisper and the lightweight and soft vegetables should be placed over.

Never leave the vegetables inside the drawers in their bags. If the vegetables are left inside their bags, this will cause them to decompose in a short period of time. In case contacting with other vegetables is not preferred for hygiene concerns, use a perforated paper and other similar packaging materials instead of a bag.

Do not store pears, apricots, peaches, apples or other fruits/vegetables that generate high levels of ethylene gas in the same drawer as other fruits/vegetables. The ethylene gas which is emitted by these fruits may cause the other fruits to ripen faster and decompose in a shorter time.

Ice bin

The ice bin is used to collect ice produced by the ice maker. Do not put water in it to make ice as it may break. The ice bin is not used for storing foods.

The ice machine may drop ice when the ice container is opened.

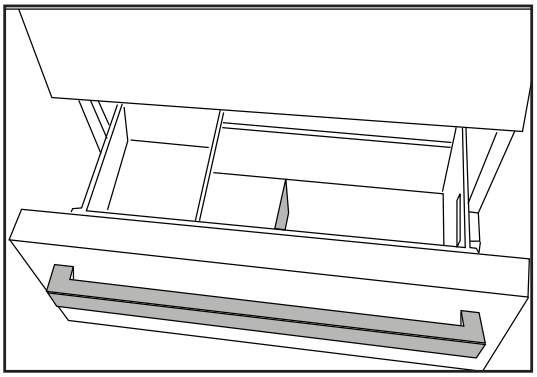

Dairy Bin

Store food such as butter, cheese and margarine in this section.

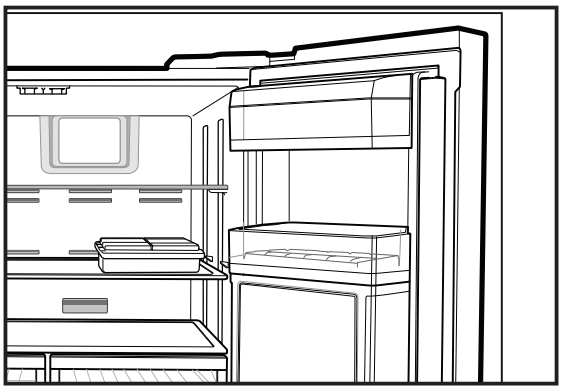

Egg holder

You can install the egg holder to the desired door or body shelf. Never keep the egg holder in the freezer compartment.

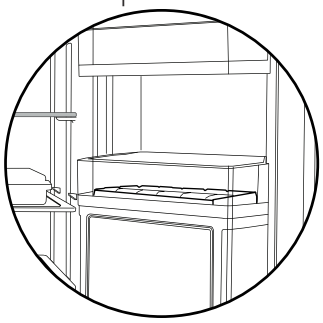

Ion Guard

Air is ionized by means of the ionizer system in the refrigerator compartment air duct. Thanks to this system, air-borne bacteria and odorizing molecules are removed from the air.

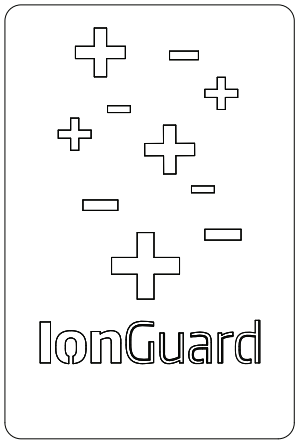

Odor filter

Odor filter in the air duct of the refrigerator compartment prevents build-up of unpleasant odors in the refrigerator.

Using internal water dispenser

After connecting the refrigerator to a water source or replacing the water filter, flush the water system. Use a sturdy container to depress and hold the water dispenser lever for 5 seconds, then release it for 5 seconds. Repeat until water begins to flow. Once water begins to flow, continue depressing and releasing the dispenser paddle (5 seconds on, 5 seconds off) until a total of 5-6 gallons.(about 20 liter) has been dispensed. This will flush air from the filter and water dispensing system, and prepare the water filter for use. Additional flushing may be required in some households. As air is cleared from the system, water may spurt out of the dispenser.
Allow 12 hours for the refrigerator to cool down and chill water. Dispense enough water every week to maintain a fresh supply.

After 5 minutes of continuous dispensing, the dispenser will stop dispensing water to avoid flooding. To continue dispensing, press the dispenser paddle again.

Dispensing water

Hold a container under the dispenser spout while pressing the dispenser pad. elease the dispenser pad to stop dispensing.

It is normal for the first few glasses of water taken from the dispenser to be warm.

If the water dispenser is not used for a long period of time, dispose of first few glasses of water to obtain fresh water.

During initial use, you will have to wait approximately 12 hours for the water to cool down.
Take out the glass a little while after you pull the trigger.

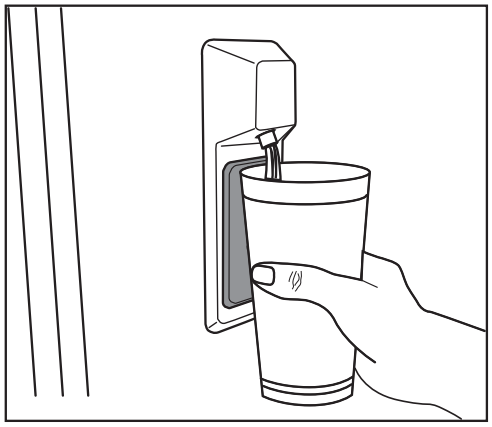

Using water dispenser

Before using your refrigerator first time and after replacing your water filter, water dispenser may drip drops of water. To prevent water dripping or leaking from dispenser, please bleed the air from the system by dispensing 5-6 gallons (about 20 liter) of water through the water dispenser before the first use and every time after you change the water filter. This will remove any air trapped in the system and stop the water dispenser from leaking. Checking coupler position and the straightness of water line at the back of the unit will be required if there's an obstruction in water flow.

If your water dispenser is leaking just a few drops of water after you have dispensed some water, this is normal.

Refrigerator Shelf Weight Limitations

Refrigerator compartment cantilever shelves, those that only have rear supports, are tested for max 25kg (55pounds) per each part. Forever fresh drawers will hold up to 15kg (33pounds) per each one. Cold Zone drawer will hold up to 20kg (44pounds). These are dynamic loads for Forever fresh drawers and Cold Zone drawer.

Ice bin holds up to 22pounds (10kg), for usage without ice. Upper freezer bin will hold up to 24kg (53 pounds) and drawer holds up to 30kg (66pounds). These are dynamic loads for ice bin, upper freezer bin and drawer.

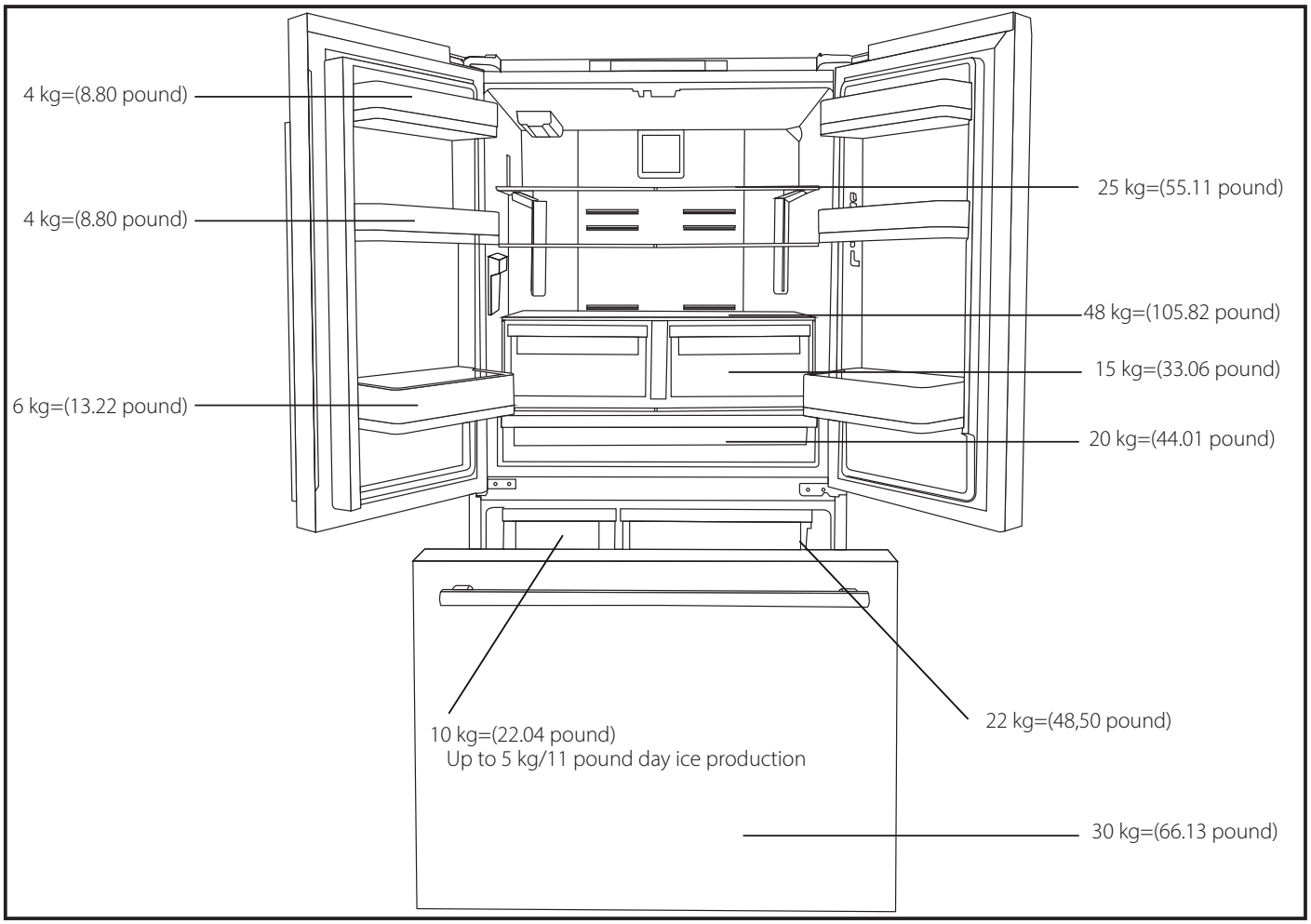

6. Maintenance and cleaning

Service life of the product extends and frequently faced problems decrease if cleaned at regular intervals.

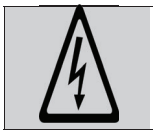

WARNING: Unplug the product before cleaning it.

- Never use gasoline, benzene or similar substances for cleaning purposes.
- Never use any sharp and abrasive tools, soap, household cleaners, detergent and wax polish for cleaning.
- Dissolve one teaspoon of baking soda in half liter of water. Soak a cloth with the solution and wring it thoroughly. Wipe the interior of the refrigerator with this cloth and dry thoroughly.
- Make sure that no water enters the lamp housing and other electrical items.
- If you will not use the refrigerator for a long period of time, unplug it, remove all food inside, clean it and leave the door ajar.
- Check regularly that the door gaskets are clean. If not, clean them.
- To remove door and body shelves, remove all of its contents.
- Remove the door shelves by pulling them up. After cleaning, slide them from top to bottom to install.
- Never use cleaning agents or water that contain chlorine to clean the outer surfaces and chromium coated parts of the product. Chlorine causes corrosion on such metal surfaces

Avoiding bad odors

Materials that may cause odor are not used in the production of our refrigerators. However, due to inappropriate food preserving conditions and not cleaning the inner surface of the refrigerator as required can bring forth the problem of odor . Pay attention to following to avoid this problem:

- Keeping the refrigerator clean is important. Food residuals, stains, etc. can cause odor . Therefore, clean the refrigerator with baking soda dissolved in water every 15 days. Never use detergents or soap.
- Keep the food in closed containers. Microorganisms spreading out from uncovered containers can cause unpleasant odors.
- Never keep the food that is past its expiration date or has spoiled in the refrigerator.

Protecting the plastic surfaces

Do not put liquid oils or oil-cooked meals in your refrigerator in unsealed containers as they damage the plastic surfaces of the refrigerator. If oil is spilled or smeared onto the plastic surfaces, clean and rinse the relevant part of the surface at once with warm water.

7. Troubleshooting

Check this list before contacting a servicer. Doing so will save you time and money. This list includes frequent complaints that are not related to faulty workmanship or materials. Certain features mentioned herein may not apply to your product.

The refrigerator is not working.

- The power plug is not fully seated. >>> Plug it in outlet completely into the socket.
- The breaker connected to the outlet powering the product or the main breaker is blown. >>> Check the breakers.

Condensation on the side wall of the refrigerator compartment

- The door is opened too frequently >>> Take care not to open the product's door too frequently.
- The environment is too humid. >>> Do not install the product in humid environments.
- Foods containing liquids are kept in unsealed holders. >>> Keep the foods containing liquids in sealed holders.
- The product's door is left open. >>> Do not keep the product's door open for long periods.
- The thermostat is set to too low temperature. >>> Set the thermostat to appropriate temperature.

Compressor is not working.

- In case of sudden power failure or pulling the power plug off and putting back on, the gas pressure in the product's cooling system is not balanced, which triggers the compressor thermic safeguard. The product will restart after approximately 6 minutes. If the product does not restart after this period, contact a servicer.
- Defrosting is active. >>> This is normal for a fully-automatic defrosting product. The defrosting is carried out periodically.
- The product is not plugged in. >>> Make sure the power cord is plugged in.
- The temperature setting is incorrect. >>> Select the appropriate temperature setting.
- The power is out. >>> The product will continue to operate normally once the power is restored.

The refrigerator's operating noise is increasing while in use.

- The product's operating performance may vary depending on the ambient temperature variations. This is normal and not a malfunction.

The refrigerator runs too often or for too long.

- The new product may be larger than the previous one. Larger products will run for longer periods.
- The room temperature may be high. >>> The product will normally run for long periods in higher room temperature.
- The product may have been recently plugged in or a new food item is placed inside. >>> The product will take longer to reach the set temperature when recently plugged in or a new food item is placed inside. This is normal.
- Large quantities of hot food may have been recently placed into the product. >>> Do not place hot food into the product.
- The doors were opened frequently or kept open for long periods. >>> The warm air moving inside will cause the product to run longer. Do not open the doors too frequently.
- The freezer or refrigerator door may be ajar. >>> Check that the doors are fully closed.
- The product may be set to temperature too low. >>> Set the temperature to a higher degree and wait for the product to reach the adjusted temperature.
- The refrigerator or freezer door gasket may be dirty, worn out, broken or not properly settled. >>> Clean or replace the gasket. Damaged / torn door gasket will cause the product to run for longer periods to preserve the current temperature.

The freezer temperature is very low, but the refrigerator temperature is adequate.

- The freezer compartment temperature is set to a very low degree. >>> Set the freezer compartment temperature to a higher degree and check again.

The refrigerator temperature is very low, but the freezer temperature is adequate.

- The refrigerator compartment temperature is set to a very low degree. >>> Set the freezer compartment temperature to a higher degree and check again.

The food items kept in refrigerator compartment drawers are frozen.

- The refrigerator compartment temperature is set to a very low degree. >>> Set the freezer compartment temperature to a higher degree and check again.

Troubleshooting

The temperature in the refrigerator or the freezer is too high.

- The refrigerator compartment temperature is set to a very high degree. >>> Temperature setting of the refrigerator compartment has an effect on the temperature in the freezer compartment. Wait until the temperature of relevant parts reach the sufficient level by changing the temperature of refrigerator or freezer compartments.
- The doors were opened frequently or kept open for long periods. >>> Do not open the doors too frequently.
- The door may be ajar. >>> Fully close the door.
- The product may have been recently plugged in or a new food item is placed inside. >>> This is normal. The product will take longer to reach the set temperature when recently plugged in or a new food item is placed inside.
- Large quantities of hot food may have been recently placed into the product. >>> Do not place hot food into the product.

Shaking or noise.

- The ground is not level or durable. >>> If the product is shaking when moved slowly, adjust the stands to balance the product. Also make sure the ground is sufficiently durable to bear the product.
- Any items placed on the product may cause noise. >>> Remove any items placed on the product.

The product is making noise of liquid flowing, spraying etc.

- The product's operating principles involve liquid and gas flows. >>> This is normal and not a malfunction.

There is sound of wind blowing coming from the product.

- The product uses a fan for the cooling process. This is normal and not a malfunction.

There is condensation on the product's internal walls.

- Hot or humid weather will increase icing and condensation. This is normal and not a malfunction.
- The doors were opened frequently or kept open for long periods. >>> Do not open the doors too frequently; if open, close the door.
- The door may be ajar. >>> Fully close the door.

There is condensation on the product's exterior or between the doors.

- The ambient weather may be humid, this is quite normal in humid weather. >>> The condensation will dissipate when the humidity is reduced.

The interior smells bad.

- The product is not cleaned regularly. >>> Clean the refrigerator with baking soda dissolved in water every 15 days.
- Certain holders and packaging materials may cause odour. >>> Use holders and packaging materials without free of odor.
- The foods were placed in unsealed holders. >>> Keep the foods in sealed holders. Micro-organisms may spread out of unsealed food items and cause an unpleasant smell or odor. Remove any expired or spoilt foods from the product.

The door is not closing.

- Food packages may be blocking the door. >>> Relocate any items blocking the doors.
- The product is not standing in full upright position on the ground. >>> Adjust the stands to balance the product.
- The ground is not level or durable. >>> Make sure the ground is level and sufficiently durable to bear the product.

TheHumidity Zone drawer is jammed.

- The food items may be in contact with the upper section of the drawer. >>> Reorganize the food items in the drawer.

If The Surface Of The Product Is Hot.

- High temperatures may be observed between the two doors, on the side panels and at the rear grill while the product is operating. This is normal and does not require service maintenance! Be careful when touching these areas.

Troubleshooting

WARNING:
If the problem persists after following the instructions in this section, contact your vendor or an Authorized Service. Do not try to repair the product.

WARNING:
- This product can expose you to chemicals including Nickel (Metallic) which is known to the State of California to cause cancer.
- For more information go to www.P65Warnings.ca.gov
- Note : Nickel is a component in all stainless steel and some other metal components.

8. Service Information

If service is required, call your dealer or authorized service agency. The name of the authorized service agency can be obtained from the dealer or distributor in your area.

Have the following information readily available:
- Model number
- Serial number
- Date purchased
- Name of dealer from whom purchased

Clearly describe the problem that you are having. If you are unable to obtain the name of an authorized service agency, or if you continue to have service problems, contact Viking Range at (888) 845-4641 or write to:

VIKING RANGE, LLC
PREFERRED SERVICE
111 Front Street
Greenwood, Mississippi 38930 USA

Record the information indicated below. You will need it if service is ever required. The serial number and model numbers for your refrigerator are located on the upper wall, behind the lighting:

Model No. _____ Serial No. _____

Date of Purchase _____ Date Installed _____

Dealer's Name _____

Address _____

_____

If service requires installation of parts, use only authorized parts to insure protection under the warranty.

Keep this manual for future reference.

FREESTANDING FRENCH DOOR REFRIGERATOR/FREEZER WARRANTY

TWO YEAR FULL WARRANTY

Freestanding french door refrigerator/freezers and all of their component parts, except as detailed below*†, are warranted to be free from defective materials or workmanship in normal residential use for a period of two (2) years from the date of original retail purchase or closing date for new construction, whichever period is longer. Viking Range, LLC, warrantor, agrees to repair or replace, at its option, any part which fails or is found to be defective during the warranty period.

***FULL NINETY (90) DAY COSMETIC WARRANTY**: Product is warranted to be free from cosmetic defects in materials or workmanship (such as scratches on stainless steel, paint/porcelain blemishes, etc.) for a period of ninety (90) days from the date of original retail purchase or closing date for new construction, whichever period is longer. Any defects must be reported to the selling dealer within ninety (90) days from date of original retail purchase. Viking Range, LLC uses high quality processes and materials available to produce all color finishes. However, slight color variation may be noticed because of the inherent differences in painted parts and porcelain parts as well as differences in kitchen lighting, product locations, and other factors. Therefore, this warranty does not apply to color variation attributable to such factors.

†FULL NINETY (90) DAY WARRANTY IN "RESIDENTIAL PLUS" APPLICATIONS: This full warranty applies to applications where use of the product extends beyond normal residential use, but the warranty period for products used in such applications is ninety (90) days. Examples of applications covered by this warranty are bed and breakfasts, fire stations, private clubs, churches, etc. Under this "Residential Plus" warranty, the product, its components and accessories are warranted to be free from defective material or workmanship for a period of ninety (90) days from the date of original retail purchase. This warranty excludes use of the product in all commercial locations such as restaurants, food service locations and institutional food service locations.

SIX YEAR FULL WARRANTY ON SEALED REFRIGERATION PARTS AS LISTED

Any sealed refrigeration system component, as listed below, is warranted to be free from defective materials or workmanship in normal household use during the third through the sixth year from the date of original retail purchase. Viking Range, LLC, warrantor, agrees to repair or replace, at its option, any part which fails or is found to be defective during the warranty period.

Sealed Refrigeration System Components: Compressor, Evaporator, Condenser, Connecting Tubing, Dryer/Strainer

TWELVE YEAR LIMITED WARRANTY ON SEALED REFRIGERATION PARTS AS LISTED

Any sealed refrigeration system component, as listed above, which fails due to defective materials or workmanship in normal household use during the seventh through the twelfth year from the date of original retail purchase will be repaired or replaced, free of charge for the part itself, with the owner paying all other costs, including labor.
Warranty Terms

WARRANTY TERMS

This warranty extends to the original retail purchaser of the product warranted hereunder and to each transferee owner of the product during the term of the original purchaser's warranty. The warranty is transferable by the original retail purchaser via home sale only. If a transferee owner is unable to provide proof of purchase from the original purchaser and the product has not been previously registered, the production date of the product, located in the serial number on the product, will serve as the effective warranty start date.
The activation date of the warranty begins from the date of original retail purchase. In the case of new product purchase via building development sales, activation begins from the earlier date of either certificate of occupancy or 24 months from date of manufacture. Note date of manufacture is identified by serial tag on product.
This warranty does not cover units purchased as b-stock, liquidation, salvage, seconds, refurbished, as-is, used products.
This warranty shall apply to products purchased in the United States and Canada. Products must be purchased in the country where service is requested. Warranty service must be performed by a Viking Range LLC authorized service agency or representative. Warranty shall not apply to damage resulting from abuse, accident, natural disaster, loss of electrical power to the product for any reason, alteration, improper installation, improper operation, or repair service of the product by anyone other than a Viking Range LLC authorized service agency or representative. This warranty does not apply to commercial usage. Warrantor is not responsible for consequential or incidental damage whether arising out of breach of warranty, breach of contract or otherwise. Some jurisdictions do not allow the exclusion or limitation of incidental or consequential damages, so the above limitations do not apply to you.

Owner shall be responsible for proper installation, providing normal care and maintenance, providing proof of purchase upon request, and making the product reasonably accessible for service. If the product or one of its component parts contains a defect or malfunction during the warranty period, after a reasonable number of attempts by the warrantor to remedy the defects or malfunctions, the owner is entitled to either a refund or replacement, at the warrantor's discretion of the product or its component part or parts. Warrantor's liability on any claim of any kind, with respect to the goods or services covered hereunder, shall in no case exceed the price of the goods or service or part thereof which gives rise to the claim.

WARRANTY SERVİCE

Under the terms of this warranty, service must be performed by a Viking Range LLC authorized service agent or representative. Service will be provided during normal business hours Labor performed at overtime or premium rates shall not be covered by the warranty. To obtain warranty service contact Viking Range LLC Customer Care at 1-888-845-4641. Please have model number, serial number, and date of original purchase available when calling. IMPORTANT: retain proof of original purchase to establish warranty period.
The return of the owner registration card is not a condition of warranty coverage. You should, however, return the owner registration card so Viking Range LLC can contact you should any question of safety arise which could affect you.

Any implied warranties of merchantability and fitness applicable to the above described burner assemblies, infrared rotisserie burners, grill grates, and stainless steel parts are limited in duration to the period of coverage of the applicable express written limited warranties set forth above. Some jurisdictions do not allow limitations on how long an implied warranty lasts, so the above limitations may not apply to you. This warranty gives you specific legal rights, and you may also have other rights which may vary from jurisdiction to jurisdiction.

Specifi cations subject to change without notice.

Viking Range, LLC
111Front Street
Greenwood, Mississippi 38930
(662)455-1200

For more product information call 1-888-845-4641
or visit our website at vikingrange.com

077784-000 EN (081521)